National Grid SA-COA
PRODUCTION FILE

Contractor	:	ABB Contracting Co.
Project	:	SS 8709- 132/13.8kV in Alkharj City
Contract No	:	11131113/00
Substation	:	8709
Subject	:	132Kv Busbar Protection Set-1 (+BBP1-1) Relay Panel-1

ABB

POWER SYSTEMS NETWORK MANAGEMENT
PROTECTION AND SUBSTATION AUTOMATION SYSTEMS
WBS NO: S-13656

ABB AUTOMATION COMPANY LTD.,
414, AL-KHARJ ROAD
SECOND INDUSTRIAL CITY
RIYADH-11383 K.S.A

CONTRACTOR : ABB Contracting Company

CLIENT : National GridSA

PROJECT : CONSTRUCTION OF NEW 132/13.8kV SS 8709 IN AL-KHARJ CITY

SUBSTATION : S/S 8709

CONTRACT NO. : 11131113/00

TITLE : Assembly Drawing - +BBP1-1
[132KV BUSBAR PROTECTION MAIN-1 CENTRAL UNIT PANEL]

THIS DRAWING AND THE INFORMATION CONTAINED HEREIN ARE THE SOLE PROPERTY OF [redacted] NO REPRODUCTION IN FULL OR IN PART SHALL BE OBTAINED FROM THIS DOCUMENT WITHOUT THE WRITTEN CONSENT OF ITS OWNER.

AS-BUILT BY _____ DATE _____ | CONTRACT NO. 11131113/00 | JOB ORDER NO. S-13656

REV. NO.	DATE	DESCRIPTION
01	13 49	FACTORY ASBUILT
00	13 04	FOR APPROVAL

DRAWN BY RIZ CHECKED BY KVR
DATE STARTED 24.01.2013 DATE COMPLETED _____
OPRG. DEPT. CTPD ENG. DEPT. AUT-PSAC

COVER SHEET
132KV BUSBAR PROTN.MAIN-1 CU PANEL +BBP1-1
S/S 8709 - 132/13.8KV IN AL-KHARJ CITY
RIYADH SAUDI ARABIA

الشركة الوطنية لنقل الكهرباء
نقل الكهرباء
National Grid SA

INDEX	PLANT NO.	DRAWING NUMBER	SHEET NO. SHT	SHEET NO. CONT.	REV. NO.
-	C421	CD-322990	G00	G01	01

NG/D2-D (2012/01)
DMS VECTOR NGD200

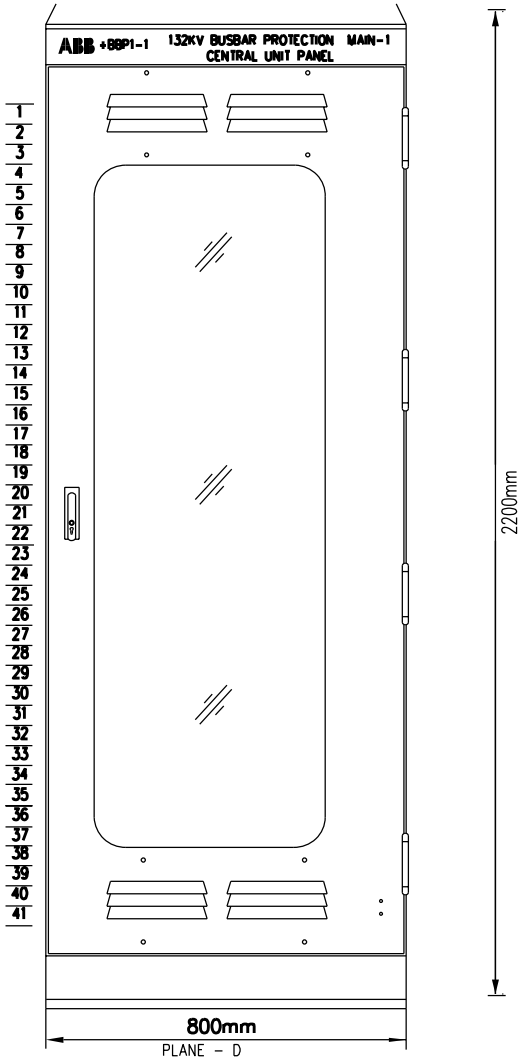

PLANE - D

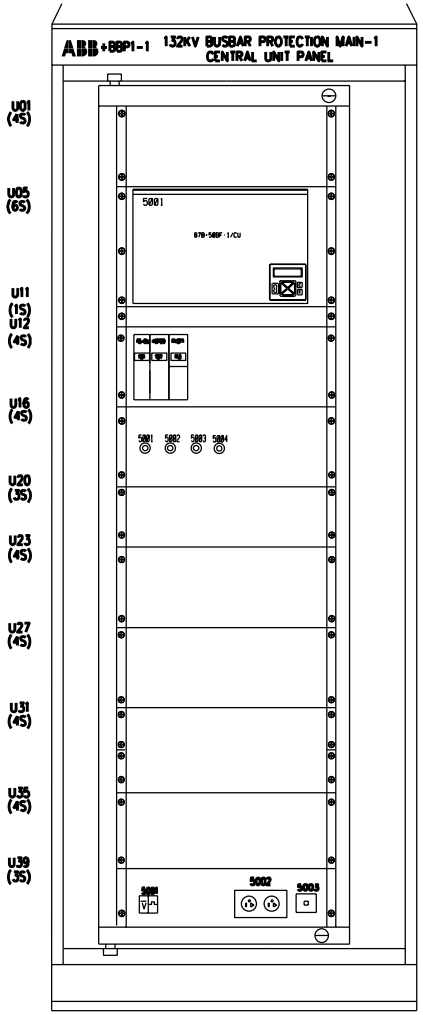

PLANE - U

MOUNTING PLANES	
EXTERIOR COLOUR	AIRCRAFT GREY COLOUR TO SHADE NO. RAL7038
INTERIOR COLOUR	SIGNAL WHITE COLOUR TO SHADE NO. RAL9003
CUBICLE TYPE	VSH 200
FRAME	HINGED FRAME, MOVABLE
CUBICLE TYPE	FRONT ACCESS
MATERIAL OF CONSTRUCTION	ALUZINK STEEL
DIMENSIONS	2200 X 800 X 800 mm(H X W X D)
CLASS OF PROTECTION	IP 41
APPROX WEIGHT	200KG
CABLE ENTRY	BOTTOM

AS-BUILT BY _____ DATE _____ | CONTRACT NO. 11131113/00 | JOB ORDER NO. S-13656

REV. NO.	DATE	DESCRIPTION
01	13 49	FACTORY ASBUILT
00	13 04	FOR APPROVAL

DRAWN BY RIZ CHECKED BY KVR
DATE STARTED 24.01.2013 DATE COMPLETED _____
OPRG. DEPT. CTPD ENG. DEPT. AUT-PSAC

ASSEMBLY DRAWING

132KV BUSBAR PROTN.MAIN-1 CU PANEL +BBP1-1

S/S 8709 - 132/13.8KV IN AL-KHARJ CITY

RIYADH SAUDI ARABIA

الشركة الوطنية لنقل الكهرباء
نقل الكهرباء
National Grid SA

INDEX	PLANT NO.	DRAWING NUMBER	SHEET NO. SHT	SHEET NO. CONT.	REV. NO.
-	C421	CD-322990	G01	G02	01

NG/D2-D (2012/01)
DMS VECTOR NGD200

THIS DRAWING AND THE INFORMATION CONTAINED HEREIN ARE THE SOLE PROPERTY OF [redacted] NO REPRODUCTION IN FULL OR IN PART SHALL BE OBTAINED FROM THIS DOCUMENT WITHOUT THE WRITTEN CONSENT OF ITS OWNER.

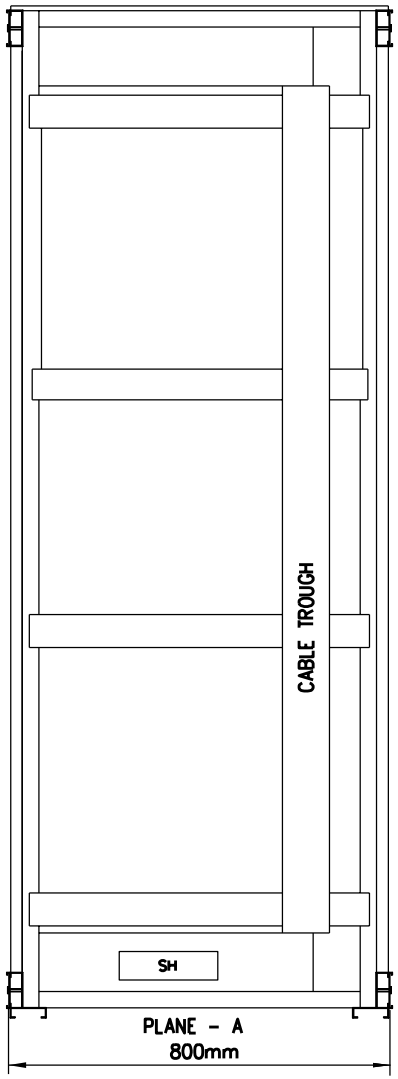

PLANE - A
800mm

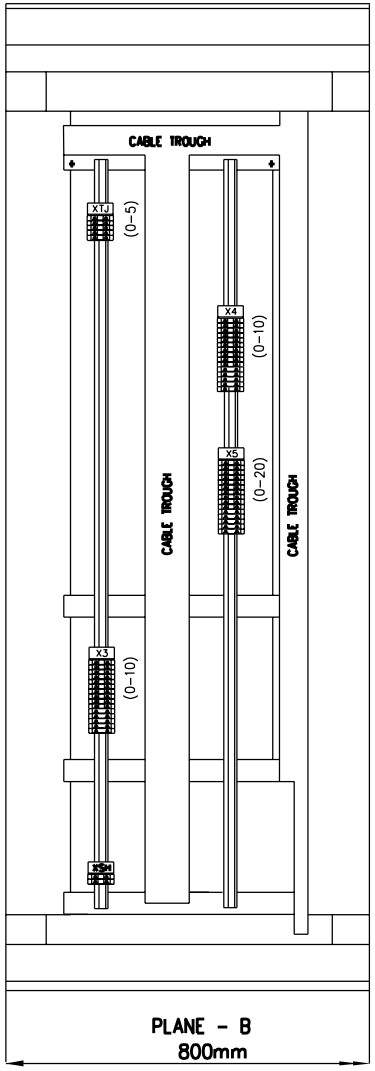

PLANE - B
800mm

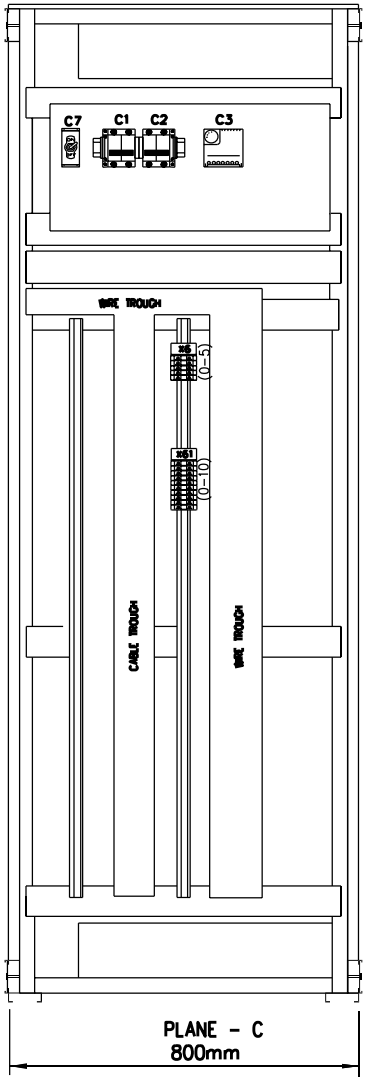

PLANE - C
800mm

PLANE - B

SCH.REF	DESCRIPTION	TYPE	MAKE
XTJ	TELEPHONE JACK	M6/8.RS	ENTRELEC
XSH	SPACE HEATER	M6/8.RS	ENTRELEC
X3	AC INCOMING CIRCUITS	D6/8.ST1.RS	ENTRELEC
X4	DC INCOMING CIRCUITS	D6/8.ST1.RS	ENTRELEC
X5	CONTROL CIRCUITS	M6/8.RS	ENTRELEC

PLANE - C

SCH.REF	DESCRIPTION	TYPE	MAKE
X6	ALARM SUPPLY	M6/8.RS	ENTRELEC
X61	ALARM CIRCUITS	M6/8.SNB	ENTRELEC

AS-BUILT BY _____ DATE _____ | CONTRACT NO. 11131113/00 | JOB ORDER NO. S-13656

REV. NO.	DATE	DESCRIPTION
01	13 49	FACTORY ASBUILT
00	13 04	FOR APPROVAL

DRAWN BY RIZ CHECKED BY KVR
DATE STARTED 24.01.2013 DATE COMPLETED _____
OPRG. DEPT. CTPD ENG. DEPT. AUT-PSAC

ASSEMBLY DRAWING

132KV BUSBAR PROTN.MAIN-1 CU PANEL +BBP1-1

S/S 8709 - 132/13.8KV IN AL-KHARJ CITY

RIYADH SAUDI ARABIA

الشركة الوطنية لنقل الكهرباء
نقل الكهرباء
National Grid SA

INDEX	PLANT NO.	DRAWING NUMBER	SHEET NO. SHT	SHEET NO. CONT.	REV. NO.
-	C421	CD-322990	G02	G03	01

NG/D2-D (2012/01)
DMS VECTOR NGD200

THIS DRAWING AND THE INFORMATION CONTAINED HEREIN ARE THE SOLE PROPERTY OF [redacted] NO REPRODUCTION IN FULL OR IN PART SHALL BE OBTAINED FROM THIS DOCUMENT WITHOUT THE WRITTEN CONSENT OF ITS OWNER.

BASE PLATE/ FOUNDATION

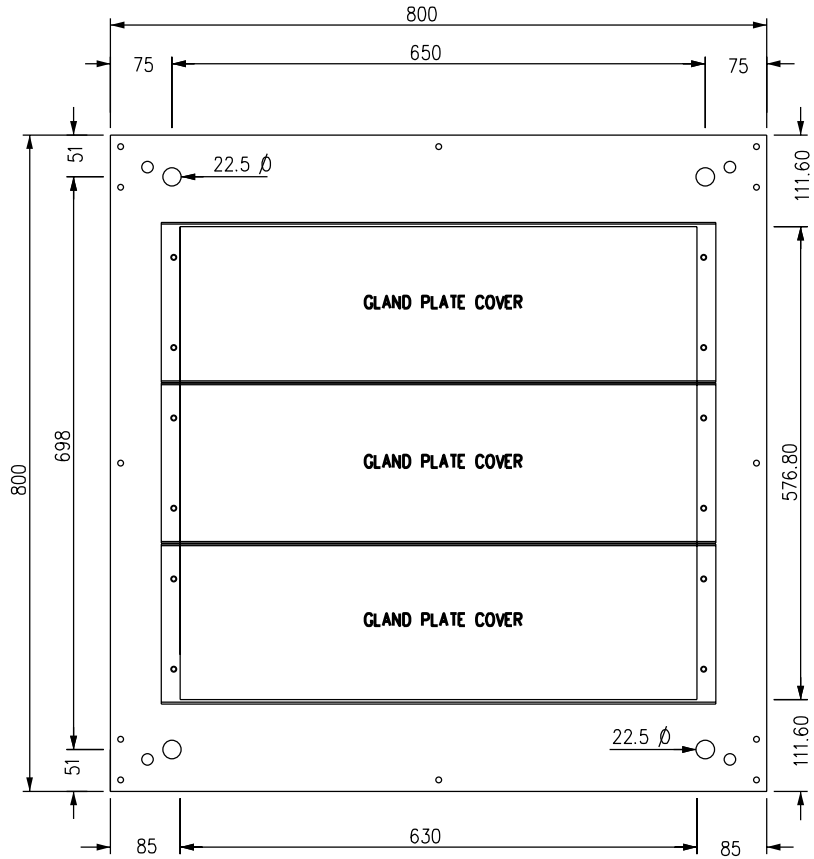

PLAN

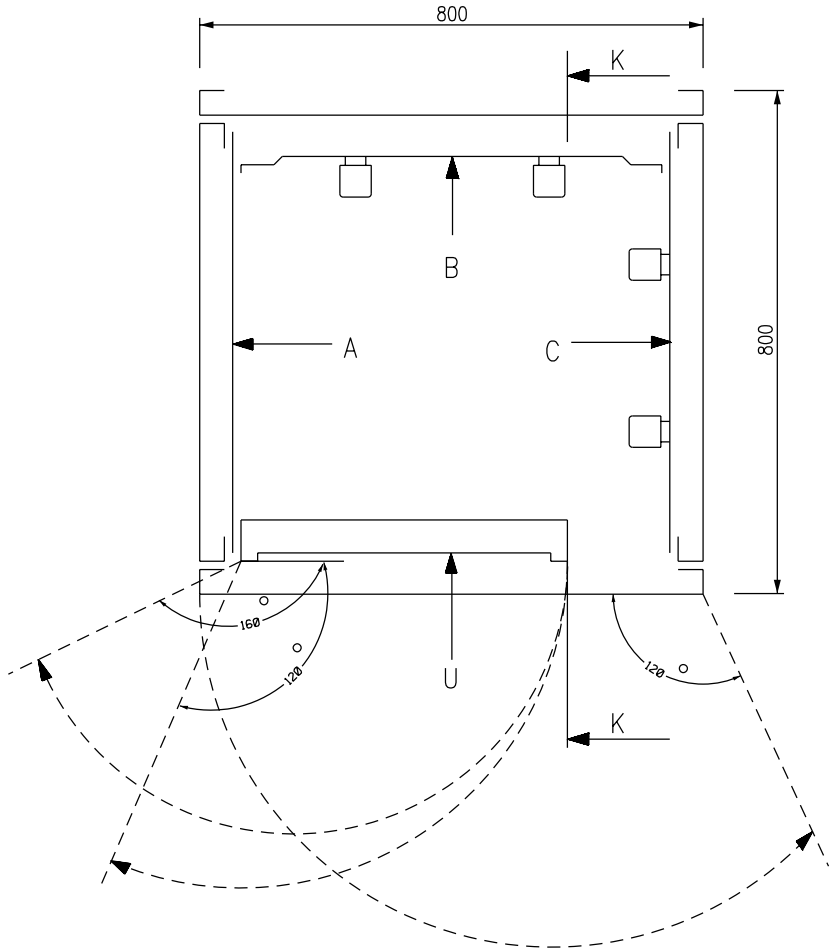

AS-BUILT BY _____ DATE _____	CONTRACT NO. 11131113/00	JOB ORDER NO. S-13656

REV. NO.	DATE	DESCRIPTION
01	13 49	FACTORY ASBUILT
00	13 04	FOR APPROVAL

DRAWN BY RIZ CHECKED BY KVR
DATE STARTED 24.01.2013 DATE COMPLETED _____
OPRG. DEPT. CTPD ENG. DEPT. AUT-PSAC

ASSEMBLY DRAWING

132KV BUSBAR PROTN.MAIN-1 CU PANEL +BBP1-1

S/S 8709 - 132/13.8KV IN AL-KHARJ CITY

RIYADH SAUDI ARABIA

الشركة الوطنية لنقل الكهرباء

نقل الكهرباء National Grid SA

INDEX	PLANT NO.	DRAWING NUMBER	SHEET NO. SHT	SHEET NO. CONT.	REV. NO.
-	C421	CD-322990	G03	G04	01

NG/D2-D (2012/01)

DMS VECTOR NGD200

THIS DRAWING AND THE INFORMATION CONTAINED HEREIN ARE THE SOLE PROPERTY OF NATIONAL GRID SA NO REPRODUCTION IN FULL OR IN PART SHALL BE OBTAINED FROM THIS DOCUMENT WITHOUT THE WRITTEN CONSENT OF ITS OWNER.

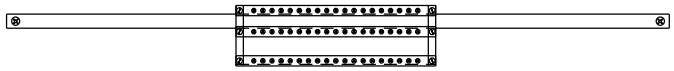

TOP VIEW FOR EARTHING BAR

U PLANE TOP LABEL

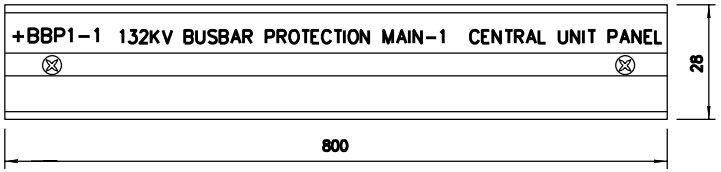

U PLANE BOTTOM LABEL

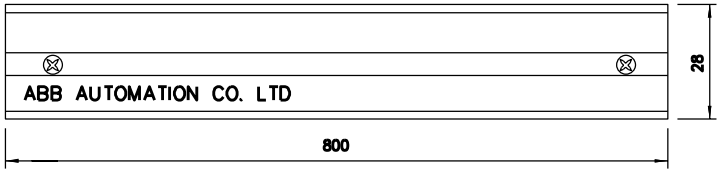

MANUFACTURING LABEL

ABB ABB Automation Co.Ltd.

PROJECT	:	National Grid SA S/S 8709
ORDER REFERENCE	:	2875 RF S13656
YEAR OF MANUFACTURE	:	2013
PANEL NO.	:	+BBP1.1
DRAWING NO.	:	S13656-CD-322991

MADE IN THE KINGDOM OF SAUDI ARABIA

REV. NO.	DATE	DESCRIPTION
01	13 49	FACTORY ASBUILT
00	13 04	FOR APPROVAL

AS-BUILT BY _____ DATE _____

CONTRACT NO. 11131113/00 JOB ORDER NO. S-13656

DRAWN BY RIZ CHECKED BY KVR

DATE STARTED 24.01.2013 DATE COMPLETED _____

OPRG. DEPT. CTPD ENG. DEPT. AUT-PSAC

ASSEMBLY DRAWING

132KV BUSBAR PROTN.MAIN-1 CU PANEL +BBP1-1

S/S 8709 - 132/13.8KV IN AL-KHARJ CITY

RIYADH SAUDI ARABIA

الشركة الوطنية لنقل الكهرباء

نقل الكهرباء National Grid SA

INDEX	PLANT NO.	DRAWING NUMBER	SHEET NO. SHT	SHEET NO. CONT.	REV. NO.
-	C421	CD-322990	G04	L00	01

NG/D2-D (2012/01)

DMS VECTOR NGD200

THIS DRAWING AND THE INFORMATION CONTAINED HEREIN ARE THE SOLE PROPERTY OF [redacted] NO REPRODUCTION IN FULL OR IN PART SHALL BE OBTAINED FROM THIS DOCUMENT WITHOUT THE WRITTEN CONSENT OF ITS OWNER.

POWER SYSTEMS NETWORK MANAGEMENT
PROTECTION AND SUBSTATION AUTOMATION SYSTEMS
WBS NO: S-13656

ABB AUTOMATION COMPANY LTD
414, AL-KHARJ ROAD
SECOND INDUSTRIAL CITY
RIYADH-11383 K.S.A

CONTRACTOR : ABB Contracting Company

CLIENT : National GridSA

PROJECT : CONSTRUCTION OF NEW 132/13.8kV SS 8709 IN AL-KHARJ CITY

SUBSTATION : S/S 8709

CONTRACT NO. : 11131113/00

TITLE : LIST OF APPARATUS +BBP1-1
[132KV BUSBAR PROTECTION MAIN-1 CENTRAL UNIT PANEL]

THIS DRAWING AND THE INFORMATION CONTAINED HEREIN ARE THE SOLE PROPERTY OF [redacted] NO REPRODUCTION IN FULL OR IN PART SHALL BE OBTAINED FROM THIS DOCUMENT WITHOUT THE WRITTEN CONSENT OF IJS OWNER.

AS-BUILT BY _____ DATE _____ | CONTRACT NO. 11131113/00 | JOB ORDER NO. S-13656

REV. NO.	DATE	DESCRIPTION
01	13 49	FACTORY ASBUILT
00	13 04	FOR APPROVAL

DRAWN BY RIZ CHECKED BY KVR
DATE STARTED 24.01.2013 DATE COMPLETED _____
OPRG. DEPT. CTPD ENG. DEPT. AUT-PSAC

COVER SHEET
132KV BUSBAR PROTN.MAIN-1 CU PANEL +BBP1-1
S/S 8709 - 132/13.8KV IN AL-KHARJ CITY
RIYADH SAUDI ARABIA

الشركة الوطنية لنقل الكهرباء
نقل الكهرباء
National Grid SA

INDEX	PLANT NO.	DRAWING NUMBER	SHEET NO. SHT	SHEET NO. CONT.	REV. NO.
-	C421	CD-322990	L00	L01	01

NG/D2-D (2012/01)
DMS VECTOR NGD200

SR. NO.	LOC. REF	SCH. REF.	D E S C R I P T I O N	SHEET NO.	QTY.	TYPE	MAKE	ORDERING INFORMATION
			RELAY CUBICLE- -BBP1-1 FOR 132KV BUSBAR PROTECTION MAIN-1		1	VSH 200	ABB	
			ACCOMODATING THE FOLLOWING					
1	U05.5001	87B-50BF-1/CU	CENTRAL UNIT FOR NUMERICAL BUSBAR PROTECTION WITH FOLLOWING	234	1	REB 500	ABB	REB500-CU03-V76-
			HIGH RELIABILITY DUE TO TWO INDEPENDENT MEASUREMENT CRITERIA	298-299				S20-P1-B1-CA3-CB1
			STABILIZED DIFFERENTIAL CURRENT ALGORITHM					1MRB1500822M60D2
			DIRECTIONAL CURRENT COMPARISION ALGORITHM					1MRB150032R0201/B
			HIGH TROUGH FAULT STABILITY EVEN IN CASE OF CT SATURATION.					
			END FAULT PROTECTION					
			FULL SOLID STATE BUSBAR REPLICA WITHOUT SWITCHING OF CT CIRCUIT.					
			THEREFORE NO CHECK ZONE REQUIRED					
			PHASE SEGREGATED MEASUREMENT					
			REDUCE CT PERFORMANCE REQUIREMENTS					
			BUILT IN EVENT RECORDER.BUILT IN EVENT DISTURBANCE RECORDER					
			BUILT IN HUMAN MACHINE INTERFACE.FULLY NUMERICAL SIGNAL PROCESSING					
			BINARY INPUT : 24					
			BINARY OUTPUT : 18					
			FULLY NUMERICAL SIGNAL PROCESSING					
			AUX. VOLTAGE : 48-250V DC					
			RATED FREQUENCY : 60HZ					
2	U12.101	TS-CU	TEST SWITCH FOR CENTRAL UNIT	232	1	RTXP18	ABB	RK 926 115-AH
3	U12.107	K01BB	BISTABLE RELAY	232	1	RXMVB 4	ABB	RK 251 401-AP
			AUXILIARY VOLTAGE : 125V DC					
			CONTACT DATA : 1NC-11NO					
			FOR BUS IMAGE ALARM					
4	U12.119	74DC-1/CU	DUAL TARGET RELAY REVERSE FLAG " BF/BB CENTRAL UNIT DC SUPPLY FAIL"	232	1	RXSF 1	ABB	RK 271 019-AN
			CONTACT DATA : 1NO + 2NC PER COIL					
5	U16.5001	1PB1	PUSH BUTTON BLACK COLOUR. WITH 2NO CONTACTS	231	1	ML1-100W	ABB	1SFA 616 100 R1006
								1SFA 616 600 R1102
6	U16.5002	1PB2	PUSH BUTTON BLACK COLOUR. WITH 2NO CONTACTS	231	1	ML1-100W	ABB	1SFA 616 100 R1006
			FOR EXTERNAL RESET					1SFA 616 600 R1102
7	U16.5003	S01	PUSH BUTTON BLACK COLOUR. WITH 2NO CONTACTS	232	1	ML1-100W	ABB	1SFA 616 100 R1006
			FOR BBP IN SELECTION					1SFA 616 600 R1102
8	U16.5004	S02	PUSH BUTTON BLACK COLOUR. WITH 2NO CONTACTS	232	1	ML1-100W	ABB	1SFA 616 100 R1006
			FOR BBP OUT SELECTION					1SFA 616 600 R1102

REV. NO.	DATE	DESCRIPTION
01	13 49	FACTORY ASBUILT
00	13 04	FOR APPROVAL

AS-BUILT BY _____ DATE _____

CONTRACT NO. 11131113/00 JOB ORDER NO. S-13656

DRAWN BY RIZ CHECKED BY KVR

DATE STARTED 24.01.2013 DATE COMPLETED _____

OPRG. DEPT. CTPD ENG. DEPT. AUT-PSAC

LIST OF APPARATUS

132KV BUSBAR PROTN.MAIN-1 CU PANEL +BBP1-1

S/S 8709 - 132/13.8KV IN AL-KHARJ CITY

RIYADH SAUDI ARABIA

الشركة الوطنية لنقل الكهرباء

نقل الكهرباء National Grid SA

INDEX	PLANT NO.	DRAWING NUMBER	SHEET NO. SHT	SHEET NO. CONT.	REV. NO.
-	C421	CD-322990	L01	L02	01

NG/D2-D (2012/01)

DMS VECTOR NGD200

THIS DRAWING AND THE INFORMATION CONTAINED HEREIN ARE THE SOLE PROPERTY OF [redacted] NO REPRODUCTION IN FULL OR IN PART SHALL BE OBTAINED FROM THIS DOCUMENT WITHOUT THE WRITTEN CONSENT OF ITS OWNER.

SR. NO.	LOCATION REF.	SCH REF.	D E S C R I P T I O N	SHT NO.	QTY.	TYPE	MAKE	ORDERING INFORMATION
8	U39.5001	01	MCB 2 POLE 6A, FOR DC SUPPLY WITH 2NC AUX. CONTACT +CU ± SUPPLY	216	1	S282 UC K6	ABB	GH S282 0164 R0317
						S2-H02		GH S270 1916 R0003
9	U39.5002	C01,C02	CONVENIENCE OUTLET 10A, 127V, 220V AC	211	1	USM45 & USMS45	LEGRAND	74140 & 74180
10		DS	DOOR SWITCH FOR CONTROL OF CUBICLE INTERNAL ILLUM. LAMP	211	1	LS30P	ABB	1SBV 010 213R 1202
11		IL	INTERNAL ILLUMINATION CUBICLE LAMP SUITABLE FOR 127V 60HZ SUPPLY	211	1	T4	SUNON	SP-20W
12		C1,C2	MINIATURE CIRCUIT BREAKER, 2 POLE, 10A FOR CONVENIENCE OUTLET	211	2	S202P-K10	ABB	2CDS 252 001 R0427
			WITH AUXILIARY SWITCH, 1NO + 1NC CONTACTS			S2C-H11L		GH S270 1917 R0001
13		SH	SPACE HEATER, 150W, 120V, 60Hz	211	1	RICA	GRUPPO	1FZEK006C001
14		C3	THERMOSTAT FOR SPACE HEATER, 5-60°C	211	1	SK 3110	RITTAL	SK 3110
15		C7	ON/OFF SWITCH FOR SPACE HEATER	211	1	M2SS1-10B	ABB	1SFA 611 200 R1006
						MCBH-10		1SFA 611 605 R1101
16	U39.5003	TJ	TELE PHONE JACK 1GANG 4WIRE	211	1	EDF410	EDISON	EDF410
		TJ	TELE PHONE JACK 1GANG 4WIRE	211	1	EDF410	EDISON	EDF410
		C6	DC CONTACTOR	216	1	ML 40E +	ABB	1SBH 143001 R8740
			4NO+4NC			CA5-041		1SBN 01 0040 R1204

REV. NO.	DATE	DESCRIPTION
01	13 49	FACTORY ASBUILT
00	13 04	FOR APPROVAL

AS-BUILT BY _____ DATE _____

CONTRACT NO. 11131113/00 JOB ORDER NO. S-13656

DRAWN BY RIZ CHECKED BY KVR

DATE STARTED 24.01.2013 DATE COMPLETED _____

OPRG. DEPT. CTPD ENG. DEPT. AUT-PSAC

LIST OF APPARATUS

132KV BUSBAR PROTN.MAIN-1 CU PANEL +BBP1-1

S/S 8709 - 132/13.8KV IN AL-KHARJ CITY

RIYADH SAUDI ARABIA

الشركة الوطنية لنقل الكهرباء

نقل الكهرباء National Grid SA

INDEX	PLANT NO.	DRAWING NUMBER	SHEET NO. SHT	SHEET NO. CONT.	REV. NO.
-	C421	CD-322990	L02	L03	01

NG/D2-D (2012/01)

DMS VECTOR NGD200

THIS DRAWING AND THE INFORMATION CONTAINED HEREIN ARE THE SOLE PROPERTY OF [redacted] NO REPRODUCTION IN FULL OR IN PART SHALL BE OBTAINED FROM THIS DOCUMENT WITHOUT THE WRITTEN CONSENT OF ITS OWNER.

SR. NO.	LOCATION REF.	SCH. REF.	D E S C R I P T I O N	SHT NO.	QTY.	TYPE	MAKE	ORDERING INFORMATION
17		X3	SPRING LOADED TERMINAL BLOCKS FOR AC SUPPLY	301	10	D6/8.ST1.RS	ENTRELEC	1SNA 115 831 R0400
		X4	SPRING LOADED TERMINAL BLOCK FOR DC CIRCUIT	301	10	D6/8.ST1.RS	ENTRELEC	1SNA 115 831 R0400
		X5	SPRING LOADED TERMINAL BLOCK FOR CONTROL CIRCUIT	301	20	M6/8.RS	ENTRELEC	1SNA 115 685 R1200
		X6	SPRING LOADED TERMINAL BLOCK FOR ALARM CIRCUIT	301	5	M6/8.RS	ENTRELEC	1SNA 115 685 R1200
		X61	SRING LOADED TERMINAL BLOCK FOR STN.-COM ALARM PANEL	301	10	M6/8 SNB	ENTRELEC	1SNA 115 688 R2500
		XSH	SPRING LOADED TERMINAL BLOCK FOR SPACE HEATER	301	2	M6/8.RS	ENTRELEC	1SNA 115 688 R2500
		XTJ	SPRING LOADED TERMINAL BLOCK FOR TELEPHONE JACK	301	5	M6/8.RS	ENTRELEC	1SNA 115 685 R1200

AS-BUILT BY _____ DATE _____ | CONTRACT NO. 11131113/00 | JOB ORDER NO. S-13656

REV. NO.	DATE	DESCRIPTION
01	13 49	FACTORY ASBUILT
00	13 04	FOR APPROVAL

DRAWN BY RIZ CHECKED BY KVR
DATE STARTED 24.01.2013 DATE COMPLETED _____
OPRG. DEPT. CTPD ENG. DEPT. AUT-PSAC

LIST OF APPARATUS

132KV BUSBAR PROTN.MAIN-1 CU PANEL +BBP1-1

S/S 8709 - 132/13.8KV IN AL-KHARJ CITY

RIYADH SAUDI ARABIA

الشركة الوطنية لنقل الكهرباء
نقل الكهرباء
National Grid SA

INDEX	PLANT NO.	DRAWING NUMBER	SHEET NO. SHT	SHEET NO. CONT.	REV. NO.
-	C421	CD-322990	L03	L04	01

NG/D2-D (2012/01)
DMS VECTOR NGD200

THIS DRAWING AND THE INFORMATION CONTAINED HEREIN ARE THE SOLE PROPERTY OF [redacted] NO REPRODUCTION IN FULL OR IN PART SHALL BE OBTAINED FROM THIS DOCUMENT WITHOUT THE WRITTEN CONSENT OF ITS OWNER.

LABEL REF.	LABEL ENGRAVING	MATERIALS	ENGRAVING	LABEL SIZE	LETTER SIZE
U05.5001	U05.5001 87B+50BF-1/CU	TRAFOLITE	BLACK LETTERS ON WHITE BACKGROUND	50X15mm	4mm
U12.101	U12.101 TS-CU	ALUMINUM PAPER FOIL	BLACK LETTERS	50X10mm	3mm
U12.107	U12.107 K01BB	ALUMINUM PAPER FOIL	BLACK LETTERS	50X10mm	3mm
U12.113	U12.113 74DC-1/CU	ALUMINUM PAPER FOIL	BLACK LETTERS	50X10mm	3mm
U16.5001	U16.5001 IPB1	TRAFOLITE	BLACK LETTERS ON WHITE BACKGROUND	50X15mm	4mm
U16.5002	U16.5002 IPB2	TRAFOLITE	BLACK LETTERS ON WHITE BACKGROUND	50X15mm	4mm
U16.5003	U16.5003 S01	TRAFOLITE	BLACK LETTERS ON WHITE BACKGROUND	50X15mm	4mm
U16.5004	U16.5004 S02	TRAFOLITE	BLACK LETTERS ON WHITE BACKGROUND	50X15mm	4mm
U39.5001	U37.5001 DC SUPPLY MCB FOR CU	TRAFOLITE	BLACK LETTERS ON WHITE BACKGROUND	50X15mm	4mm
U39.5002	U39.5002 C01-127V,C02-220V	TRAFOLITE	BLACK LETTERS ON WHITE BACKGROUND	50X15mm	4mm
U39.5003	U39.5003 1J	TRAFOLITE	BLACK LETTERS ON WHITE BACKGROUND	50X15mm	4mm

AS-BUILT BY _____ DATE _____ | CONTRACT NO. 11131113/00 | JOB ORDER NO. S-13656

REV. NO.	DATE	DESCRIPTION
01	13 49	FACTORY ASBUILT
00	13 04	FOR APPROVAL

DRAWN BY RIZ CHECKED BY KVR
DATE STARTED 24.01.2013 DATE COMPLETED _____
OPRG. DEPT. CTPD ENG. DEPT. AUT-PSAC

LIST OF APPARATUS

132KV BUSBAR PROTN.MAIN-1 CU PANEL +BBP1-1

S/S 8709 - 132/13.8KV IN AL-KHARJ CITY

RIYADH SAUDI ARABIA

الشركة الوطنية لنقل الكهرباء
نقل الكهرباء
National Grid SA

INDEX	PLANT NO.	DRAWING NUMBER	SHEET NO. SHT	SHEET NO. CONT.	REV. NO.
-	C421	CD-322990	L04	L05	01

NG/D2-D (2012/01)
DMS VECTOR NGD200

THIS DRAWING AND THE INFORMATION CONTAINED HEREIN ARE THE SOLE PROPERTY OF [redacted] NO REPRODUCTION IN FULL OR IN PART SHALL BE OBTAINED FROM THIS DOCUMENT WITHOUT THE WRITTEN CONSENT OF ITS OWNER.

LABEL REF.	LABEL ENGRAVING	MATERIALS	ENGRAVING	LABEL SIZE	LETTER SIZE
C1	C1 127V AC SUPPLY MCB	TRAFOLITE	BLACK LETTERS ON WHITE BACKGROUND	50X15mm	4mm
C2	C2 220V AC SUPPLY MCB	TRAFOLITE	BLACK LETTERS ON WHITE BACKGROUND	50X15mm	4mm
C3	C3 THERMOSTAT	TRAFOLITE	BLACK LETTERS ON WHITE BACKGROUND	50X15mm	4mm
C7	C7 ON/OFF SWITCH	TRAFOLITE	BLACK LETTERS ON WHITE BACKGROUND	50X15mm	4mm
DS	DS DOOR SWITCH	TRAFOLITE	BLACK LETTERS ON WHITE BACKGROUND	50X15mm	4mm
IL	IL ILLUMINATION LAMP	TRAFOLITE	BLACK LETTERS ON WHITE BACKGROUND	50X15mm	4mm
SH	SH SPACE HEATER	TRAFOLITE	BLACK LETTERS ON WHITE BACKGROUND	50X15mm	4mm

AS-BUILT BY _____ DATE _____ | CONTRACT NO. 11131113/00 | JOB ORDER NO. S-13656

REV. NO.	DATE	DESCRIPTION
01	13 49	FACTORY ASBUILT
00	13 04	FOR APPROVAL

DRAWN BY RIZ CHECKED BY KVR
DATE STARTED 24.01.2013 DATE COMPLETED _____
OPRG. DEPT. CTPD ENG. DEPT. AUT-PSAC

LIST OF APPARATUS

132KV BUSBAR PROTN.MAIN-1 CU PANEL +BBP1-1

S/S 8709 - 132/13.8KV IN AL-KHARJ CITY

RIYADH SAUDI ARABIA

الشركة الوطنية لنقل الكهرباء
نقل الكهرباء
National Grid SA

INDEX	PLANT NO.	DRAWING NUMBER	SHEET NO. SHT	SHEET NO. CONT.	REV. NO.
-	C421	CD-322990	L05	NIL	01

NG/D2-D (2012/01)
DMS VECTOR NGD200

THIS DRAWING AND THE INFORMATION CONTAINED HEREIN ARE THE SOLE PROPERTY OF [redacted] NO REPRODUCTION IN FULL OR IN PART SHALL BE OBTAINED FROM THIS DOCUMENT WITHOUT THE WRITTEN CONSENT OF ITS OWNER.

POWER SYSTEMS NETWORK MANAGEMENT
PROTECTION AND SUBSTATION AUTOMATION SYSTEMS
WBS NO: S-13656

ABB AUTOMATION COMPANY LTD.
414, AL-KHARJ ROAD
SECOND INDUSTRIAL CITY
RIYADH-11383 K.S.A

CONTRACTOR : ABB Contracting Company

CLIENT : National GridSA

PROJECT : CONSTRUCTION OF NEW 132/13.8kV SS 8709 IN AL-KHARJ CITY

SUBSTATION : S/S 8709

CONTRACT NO. : 11131113/00

TITLE : SCHEMATICS DRAWINGS - +BBP1-1
[132KV BUSBAR PROTECTION MAIN-1 CENTRAL UNIT PANEL]

THIS DRAWING AND THE INFORMATION CONTAINED HEREIN ARE THE SOLE PROPERTY OF [redacted] NO REPRODUCTION IN FULL OR IN PART SHALL BE OBTAINED FROM THIS DOCUMENT WITHOUT THE WRITTEN CONSENT OF ITS OWNER.

AS-BUILT BY _____ DATE _____ | CONTRACT NO. 11131113/00 | JOB ORDER NO. S-13656

REV. NO.	DATE	DESCRIPTION
01	13 49	FACTORY ASBUILT
00	13 04	FOR APPROVAL

DRAWN BY RIZ CHECKED BY KVR
DATE STARTED 24.01.2013 DATE COMPLETED _____
OPRG. DEPT. CTPD ENG. DEPT. AUT-PSAC

COVER SHEET
132KV BUSBAR PROTN.MAIN-1 CU PANEL +BBP1-1
S/S 8709 - 132/13.8KV IN AL-KHARJ CITY
RIYADH SAUDI ARABIA

الشركة الوطنية لنقل الكهرباء
نقل الكهرباء
National Grid SA

INDEX	PLANT NO.	DRAWING NUMBER	SHEET NO. SHT	SHEET NO. CONT.	REV. NO.
-	C421	CD-322991	000	001	01

NG/D2-D (2012/01)
DMS VECTOR NGD200

CONTENTS	ABB SHT.NO.	REV.00	REV.01	REV.02
COVER SHEET	000	X	X	
CONTENTS SHEET	001	X	X	
GRAPHICAL SYMBOLS FOR DIAGRAMS	011	X	X	
GRAPHICAL SYMBOLS FOR DIAGRAMS	012	X	X	
COMMON LEGEND	013	X	X	
FERULE AND WIRING DETAILS	014	X	X	
DRAWING REFERENCES	015	X	X	
DRAWING REFERENCES	016	X	X	
AC SUPPLY FOR ILLUMINATION & POWER SOCKET	211	X	X	
AC SUPPLY AUXILARY CONTACTS	212	X	X	
DC SUPPLY DISTRIBUTION ± R1.	216	X	X	
87B+50BF-2/CU PROTECTION RELAY-BINARY INPUTS	231	X	X	
BBP IN/OUT SELECTION CIRCUIT	232	X	X	
STATION COMMON ALARM CIRCUITS	233	X	X	
87B+50BF-2/CU COMMUNICATION TO BAY UNITS	234	X	X	
87B+50BF-2/CU INTERNAL DIAGRAM	298	X	X	
87B+50BF-2/CU INTERNAL DIAGRAM	299	X	X	
TERMINAL BLOCK ALLOCATION	301	X	X	

AS-BUILT BY _____ DATE _____ | CONTRACT NO. 11131113/00 | JOB ORDER NO. S-13656

REV. NO.	DATE	DESCRIPTION
01	13 49	FACTORY ASBUILT
00	13 04	FOR APPROVAL

DRAWN BY RIZ CHECKED BY KVR
DATE STARTED 24.01.2013 DATE COMPLETED _____
OPRG. DEPT. CTPD ENG. DEPT. AUT-PSAC

CONTENTS SHEET

132KV BUSBAR PROTN.MAIN-1 CU PANEL +BBP1-1
S/S 8709 - 132/13.8KV IN AL-KHARJ CITY
RIYADH SAUDI ARABIA

الشركة الوطنية لنقل الكهرباء
نقل الكهرباء
National Grid SA

INDEX	PLANT NO.	DRAWING NUMBER	SHEET NO. SHT	SHEET NO. CONT.	REV. NO.
-	C421	CD-322991	001	011	01

NG/D2-D (2012/01)
DMS VECTOR NGD200

THIS DRAWING AND THE INFORMATION CONTAINED HEREIN ARE THE SOLE PROPERTY OF [redacted] NO REPRODUCTION IN FULL OR IN PART SHALL BE OBTAINED FROM THIS DOCUMENT WITHOUT THE WRITTEN CONSENT OF ITS OWNER.

SYMBOL	DESCRIPTION
	FRAME CONNECTION
	EARTH CONNECTION
	RESISTOR
	VARIABLE RESISTOR
	RESISTOR WITH PRESET ADJUSTMENT
	CAPACITOR
	SEMICONDUCTOR DIODE USED AS A CAPACITIVE DEVICE
	OPEN CONTACT, MAKE CONTACT
	CLOSED CONTACT, BREAK CONTACT
	CHANGE-OVER CONTACT, BREAK BEFORE MAKE
	MAKE CONTACT WHICH IS EARLY WHEN OPERATING AND LATE WHEN RELEASING
	BREAK CONTACT WHICH IS LATE WHEN OPERATING AND EARLY WHEN RELEASING
	SWITCHING DEVICE WITH MANUAL CONTROL
	MAKE CONTACT DELAYED WHEN OPERATING
	BREAK CONTACT DELAYED WHEN RELEASING
	MAKE CONTACT DELAYED WHEN OPERATING AND RELEASING
	MAIN CONTACT OF A SWITCH DISCONNECTOR
	MAIN CONTACT OF A DISCONNECTOR

SYMBOL	DESCRIPTION
	MAIN CONTACT OF A CIRCUIT BREAKER
	PASSING MAKE CONTACT CLOSING MOMENTARILY DURING OPERATION AND RELEASE
	BREAK CONTACT DELAYED WHEN OPERATING
	MAKE CONTACT DELAYED WHEN RELEASING
	TWO MECHANICAL LINKS CROSSING WITHOUT CONNECTION
	JUNCTION OF MECHANICAL LINKS
	AUTOMATIC RESET
	NON-AUTOMATIC RESET
	SWITCHING DEVICE WITH MANUAL OPERATION AND WITH AUTOMATIC RESET
	SWITCHING DEVICE WITH MANUAL OPERATION AND WITH NON-AUTOMATIC RESET
	CHANGE-OVER SWITCHING DEVICE WITH MANUAL CONTROL AUTOMATIC RESET FROM POSITION 1-2 TO THE NEUTRAL POSITION
	RELAY WITH MAKE CONTACT
	RELAY WITH CHANGE-OVER CONTACT
	RELAY WITH MAKE CONTACT, DELAYED WHEN OPERATING
	RELAY WITH MAKE CONTACT, DELAYED WHEN RELEASING
	RELAY WITH MAKE CONTACT, DELAYED WHEN OPERATING AND RELEASING

SYMBOL	DESCRIPTION
	RELAY WITH TWO MAKE CONTACTS, ONE OF THEM DELAYED WHEN OPERATING
	RELAY WITH TWO ACTUATORS AND A TWO STABLE POSITIONS
	SIGNALLING LAMP
	MECHANICAL INDICATOR WITH AUTOMATIC RESET
	MECHANICAL INDICATOR WITH NON-AUTOMATIC RESET
	ELECTRICALLY CONTROLLED MECHANICAL INDICATOR WITH AUTOMATIC RESET
	ELECTRICALLY CONTROLLED MECHANICAL INDICATOR WITH NON-AUTOMATIC RESET
	RELAY WITH MECHANICAL INDICATOR
	ELECTRO-MECHANICAL POSITION INDICATOR WITH ONE DE-ENERGIZED AND ONE OPERATED POSITION
	ELECTRO-MECHANICAL POSITION INDICATOR WITH ONE DE-ENERGIZED AND TWO OPERATED POSITION
	BELL, BUZZER
	SIREN , HORN

AS-BUILT BY _____ DATE _____ | CONTRACT NO. 11131113/00 | JOB ORDER NO. S-13656

REV. NO.	DATE	DESCRIPTION
01	13 49	FACTORY ASBUILT
00	13 04	FOR APPROVAL

DRAWN BY RIZ CHECKED BY KVR
DATE STARTED 24.01.2013 DATE COMPLETED _____
OPRG. DEPT. CTPD ENG. DEPT. AUT-PSAC

GRAPHICAL SYMBOLS FOR DIAGRAMS

132KV BUSBAR PROTN.MAIN-1 CU PANEL +BBP1-1

S/S 8709 - 132/13.8KV IN AL-KHARJ CITY

RIYADH SAUDI ARABIA

الشركة الوطنية لنقل الكهرباء

نقل الكهرباء National Grid SA

INDEX	PLANT NO.	DRAWING NUMBER	SHEET NO. SHT	SHEET NO. CONT.	REV. NO.
-	C421	CD-322991	011	012	01

NG/D2-D (2012/01)

DMS VECTOR NGD200

THIS DRAWING AND THE INFORMATION CONTAINED HEREIN ARE THE SOLE PROPERTY OF [redacted] NO REPRODUCTION IN FULL OR IN PART SHALL BE OBTAINED FROM THIS DOCUMENT WITHOUT THE WRITTEN CONSENT OF ITS OWNER.

SYMBOL	DESCRIPTION
	FUSE / LINK
	FUSE WITH THE SUPPLY SIDE INDICATED
	SINGLE-PHASE TRANSFORMER WITH TWO SEPARATE WINDINGS (TWO ALTERNATIVE FORMS)
	SINGLE-PHASE TRANSFORMER WITH THREE SEPARATE WINDINGS (TWO ALTERNATIVE FORMS)
	SINGLE-PHASE TRANSFORMER WITH FERRO MAGNETIC CORE
	SINGLE-PHASE VOLTAGE TRANSFORMER (MULTI-LINE AND SINGLE-LINE REPRESENTATION)
	SINGLE-PHASE VOLTAGE TRANSFORMER WITH TWO SECONDARY WINDINGS (MULTI-LINE AND SINGLE-LINE REPRESENTATION)
	CURRENT TRANSFORMER (MULTI-LINE AND SINGLE-LINE REPRESENTATION)
	CURRENT TRANSFORMER WITH TWO CORES (MULIT-LINE AND SINGLE-LINE REPRESENTATION)
	CURRENT TRANSFORMER WITH TWO SECONDARY WINDINGS ON ONE CORE (MULTI-LINE AND SINGLE-LINE REPRESENTATION)
	FILTER
	HIGH-PASS FILTER
	BAND-PASS FILTER
V	VOLTMETER
A	AMMETER

SYMBOL	DESCRIPTION
W	WATTMETER
Var	VARMETER
PF	POWER FACTOR METER
	POSITION INDICATOR
	SYNCHROSCOPE
V	RECORDING VOLTMETER
W	RECORDING WATTMETER
h	HOUR METER
Wh	WATT-HOUR METER
Wh	WATT-HOUR METER FOR ENERGY FROM A BUSBAR SYSTEM
	ELEMENT WITH STATIC INPUT
	ELEMENT WITH STATIC NEGATED INPUT
	ELEMENT WITH STATIC NEGATED OUTPUT
	ELEMENT WITH DYNAMIC INPUT
	ELEMENT WITH DYNAMIC NEGATED INPUT
	ELEMENT WITH INHIBITING INPUT

SYMBOL	DESCRIPTION
	ELEMENT WITH NEGATED INHIBITING INPUT
	ELEMENT WITH INPUT WHICH DOES NOT CARRY ANY LOGIC INFORMATION
X1	ELEMENT WITH POSTPONED OUTPUT
&	AND-ELEMENT WITH TWO INPUTS
>1	OR-ELEMENT WITH TWO INPUTS
≥2	LOGIC THRESHOLD ELEMENT WITH FOUR INPUTS AND THRESHOLD VALUE 2
=2	ELEMENT WITH THREE INPUTS FOR "2 AND ONLY 2"
=1	EXCLUSIVE OR-ELEMENT WITH THREE INPUTS
=	LOGIC IDENTITY ELEMENT WITH THREE INPUTS
>n/2	MAJORITY ELEMENT WITH THREE INPUTS
1	NEGATOR
&	NAND ELEMENT WITH TWO INPUTS
>1	NOR ELEMENT WITH TWO INPUTS
X Y	BISTABLE ELEMENT

AS-BUILT BY _____ DATE _____	CONTRACT NO. 11131113/00	JOB ORDER NO. S-13656	GRAPHICAL SYMBOLS FOR DIAGRAMS
	DRAWN BY RIZ	CHECKED BY KVR	132KV BUSBAR PROTN.MAIN-1 CU PANEL +BBP1-1
	DATE STARTED 24.01.2013	DATE COMPLETED _____	S/S 8709 - 132/13.8KV IN AL-KHARJ CITY
	OPRG. DEPT. CTPD	ENG. DEPT. AUT-PSAC	RIYADH SAUDI ARABIA

REV. NO.	DATE	DESCRIPTION
01	13 49	FACTORY ASBUILT
00	13 04	FOR APPROVAL

الشركة الوطنية لنقل الكهرباء
نقل الكهرباء
National Grid SA

INDEX	PLANT NO.	DRAWING NUMBER	SHEET NO. SHT	SHEET NO. CONT.	REV. NO.
-	C421	CD-322991	012	013	01

NG/D2-D (2012/01)
DMS VECTOR NGD200

THIS DRAWING AND THE INFORMATION CONTAINED HEREIN ARE THE SOLE PROPERTY OF NATIONAL GRID SA NO REPRODUCTION IN FULL OR IN PART SHALL BE OBTAINED FROM THIS DOCUMENT WITHOUT THE WRITTEN CONSENT OF ITS OWNER.

LEGENDS

±R1	DC SUPPLY - MAIN PROTECTION
±R2	DC SUPPLY - SECONDARY PROTECTION
±R3	DC SUPPLY - BACK UP PROTECTION
±IT	DC SUPPLY - INTER TRIP
FL	DC SUPPLY - FLASHING CIRCUIT
BB RS±	DC SUPPLY - BUS BAR - PROTECTION RESET
BB CBF±/CBF±	DC SUPPLY - CBF PROTECTION
R	RESET BUS - ALARM SYSTEM
CR	CONTROL ROOM
ECC	ENERGY CONTROL CENTRE
LOCAL	THE LOCATION OF CONTROLLED DEVICE
REMOTE	ANY OTHER LOCATION NOT LOCAL
ON	CB NORMALLY OPEN AUXILIARY CONTACT
OFF	CB NORMALLY CLOSED AUXILIARY CONTACT
A	COMMON
T	TEST POSITION
S	SERVICE POSITION
CS	CLOSE IN SERVICE POSITION
CT	CLOSE IN TEST POSITION
LS	LOCAL SERVICE
LT	LOCAL TEST
LC	LOCAL CLOSE
LO	LOCAL OPEN
RO	REMOTE OPEN

NOTES

LABELS

WHITE LABEL WITH BLACK LETTERING WILL BE PROVIDED FOR ALL MOUNTED APPARATUS EQUIPMENT IDENTIFICATION AND FUNCTION REFERENCE LABEL WILL BE PROVIDED FOR FRONT MOUNTED EQUIPMENTS OF THE PANEL AND EQUIPMENT IDENTIFICATION LABEL WILL BE PROVIDED FOR INTERNALLY MOUNTED EQUIPMENTS

LUGS

A. CT CIRCUITS- RING TYPE
B. OTHER CIRCUITS - SPADE TYPE

FERULLING

YELLO TUBE 3.2 mm FOR 1.5SQ mm WIRES AND 4.2 FOR 2.5 SQ mm WIRES (AS PER 31 - TMSS-1, RE.0)

THIS DRAWING AND THE INFORMATION CONTAINED HEREIN ARE THE SOLE PROPERTY OF NATIONAL GRID SA NO REPRODUCTION IN FULL OR IN PART SHALL BE OBTAINED FROM THIS DOCUMENT WITHOUT THE WRITTEN CONSENT OF ITS OWNER.

AS-BUILT BY _____ DATE _____ | CONTRACT NO. 11131113/00 | JOB ORDER NO. S-13656

REV. NO.	DATE	DESCRIPTION
01	13 49	FACTORY ASBUILT
00	13 04	FOR APPROVAL

DRAWN BY RIZ CHECKED BY KVR
DATE STARTED 24.01.2013 DATE COMPLETED _____
OPRG. DEPT. CTPD ENG. DEPT. AUT-PSAC

COMMON LEGENDS
132KV BUSBAR PROTN.MAIN-1 CU PANEL +BBP1-1
S/S 8709 - 132/13.8KV IN AL-KHARJ CITY
RIYADH SAUDI ARABIA

الشركة الوطنية لنقل الكهرباء
نقل الكهرباء National Grid SA

INDEX	PLANT NO.	DRAWING NUMBER	SHEET NO. SHT	SHEET NO. CONT.	REV. NO.
-	C421	CD-322991	013	014	01

NG/D2-D (2012/01)
DMS VECTOR NGD200

FOR 132kV RELAY & CONTROL, PROTN. PANELS

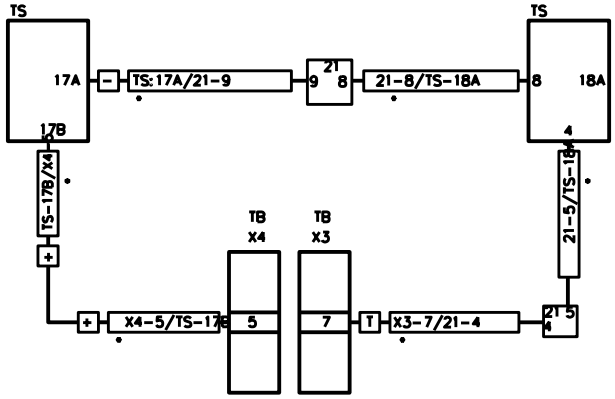

AS PER IEC-391 FIG 14a (W/O SUPPLEMENTARY/IDENTIFICATION MARK)

NOTE:1 ADDITIONAL MARKING AS APPLICABLE

NOTE:2 FERRULE NUMBERING WILL BE BLACK LETTERS ON YELLOW TUBE
3.2 mm for 1.5 sq mm wires and
4.2 mm for 2.5 sq mm wires
(As per 31-TMSS-1, REV 0)

NOTE:3 STARTING POINT OF THE FERRULE LEFT TO RIGHT

FOR 132kV PANELS INTERPANEL WIRING

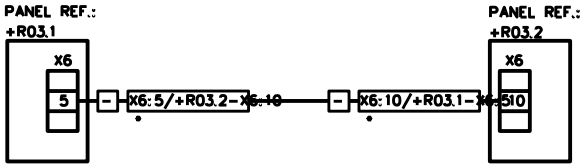

AS PER IEC-391 FIG 14d (W/O SUPPLEMENTARY/IDENTIFICATION MARK)

WIRES - PVC insulated,stranded, cooled annealed copper conductor graded for 1000V	a. CT Circuits - 2.5 Sqmm PVC Yellow colour
	b. VT Circuits - 1.5 Sqmm PVC Red colour
	c. DC, & CONTROL Circuits - 1.5 Sqmm PVC Grey colour
	d. Alarm Circuits - 1.0 Sqmm PVC Blue colour
	e. AVC & AC Circuits - 2.5 Sqmm PVC Black colour
	f. Earth Circuits - 2.5 Sqmm PVC Yellow/Green colour
LUGS - Pre-insulated	a(CT Circuits - Ring type
	b(Other Circuits - Spade type

REV. NO.	DATE	DESCRIPTION
01	13 49	FACTORY ASBUILT
00	13 04	FOR APPROVAL

AS-BUILT BY _____ DATE _____ CONTRACT NO. 11131113/00 JOB ORDER NO. S-13656

DRAWN BY RIZ CHECKED BY KVR
DATE STARTED 24.01.2013 DATE COMPLETED _____
OPRG. DEPT. CTPD ENG. DEPT. AUT-PSAC

FERRULE AND WIRING DETAILS

132KV BUSBAR PROTN.MAIN-1 CU PANEL +BBP1-1

S/S 8709 - 132/13.8KV IN AL-KHARJ CITY

RIYADH SAUDI ARABIA

الشركة الوطنية لنقل الكهرباء
نقل الكهرباء
National Grid SA

INDEX	PLANT NO.	DRAWING NUMBER	SHEET NO. SHT	SHEET NO. CONT.	REV. NO.
-	C421	CD-322991	014	015	01

NG/D2-D (2012/01)
DMS VECTOR NGD200

THIS DRAWING AND THE INFORMATION CONTAINED HEREIN ARE THE SOLE PROPERTY OF [illegible] NO REPRODUCTION IN FULL OR IN PART SHALL BE OBTAINED FROM THIS DOCUMENT WITHOUT THE WRITTEN CONSENT OF ITS OWNER.

MANUFACTURER	SCHEMATICS DWG.NO	PANEL DESCRIPITION	PANEL REFERENCE
ABB PROTECTION & SUBSTATION AUTOMATION		SS 8709 132kV RELAY PANELS	
	CD-322928	132/13.8kV GT-1 RELAY PANEL -1	+R05.1
		132/13.8kV GT-1 RELAY PANEL -2	+R05.2
	CD-322931	132/13.8kV GT-2 RELAY PANEL -1	+R01.1
		132/13.8kV GT-2 RELAY PANEL -2	+R01.2
	CD-322934	132/13.8kV GT-3 RELAY PANEL -1	+R04.1
		132/13.8kV GT-3 RELAY PANEL -2	+R04.2
	CD-322936	132/13.8kV TRANSFORMER-1,2& 3 AVC PANEL	+AVC
	CD-322922	132KV SPARE-1 UGF RELAY PANEL -1	+R07.1
		132KV SPARE-1 UGF RELAY PANEL -2	+R07.2
	CD-322916	132KV 8020 UGF RELAY PANEL -1	+R02.1
		132KV 8020 UGF RELAY PANEL -2	+R02.2
	CD-322919	132KV 8710 UGF RELAY PANEL -1	+R03.1
		132KV 8710 UGF RELAY PANEL -2	+R03.2
	CD-322925	132KV SPARE-2 UGF RELAY PANEL -1	+R06.1
		132KV SPARE-2 UGF RELAY PANEL -2	+R06.2
	CD-323012	132KV FOIP PANEL	+FOIP
	CD-322946	132kV BUS COUPLER-A	+R130
	CD-322948	132kV BUS COUPLER-B	+R230
	CD-322950	132kV BUS SECTION	+R120
	CD-322991	132kV BUSBAR PROTECTION MAIN-1 CENTRAL UNIT PANEL	+BBP1-1
	CD-322993	132kV BUSBAR PROTECTION MAIN-1 BAY UNIT PANEL	+BBP1-2
	CD-322995	132kV BUSBAR PROTECTION MAIN-1 BAY UNIT PANEL	+BBP1-3
	CD-322997	132kV BUSBAR PROTECTION MAIN-1 BAY UNIT PANEL	+BBP1-4
	CD-322999	132kV BUSBAR PROTECTION MAIN-1 BAY UNIT PANEL	+BBP1-5
	CD-323001	132kV BUSBAR PROTECTION MAIN-2 CENTRAL UNIT PANEL	+BBP2-1
	CD-323003	132kV BUSBAR PROTECTION MAIN-2 BAY UNIT PANEL	+BBP2-2
	CD-323005	132kV BUSBAR PROTECTION MAIN-2 BAY UNIT PANEL	+BBP2-3
	CD-323007	132kV BUSBAR PROTECTION MAIN-2 BAY UNIT PANEL	+BBP2-4
	CD-323009	132kV BUSBAR PROTECTION MAIN-2 BAY UNIT PANEL	+BBP2-5

AS-BUILT BY _____ DATE _____ | CONTRACT NO. 11131113/00 | JOB ORDER NO. S-13656

REV. NO.	DATE	DESCRIPTION
01	13 49	FACTORY ASBUILT
00	13 04	FOR APPROVAL

DRAWN BY RIZ CHECKED BY KVR
DATE STARTED 24.01.2013 DATE COMPLETED _____
OPRG. DEPT. CTPD ENG. DEPT. AUT-PSAC

DRAWING REFERENCES

132KV BUSBAR PROTN.MAIN-1 CU PANEL +BBP1-1

S/S 8709 - 132/13.8KV IN AL-KHARJ CITY

RIYADH SAUDI ARABIA

الشركة الوطنية لنقل الكهرباء
نقل الكهرباء
National Grid SA

INDEX	PLANT NO.	DRAWING NUMBER	SHEET NO. SHT	SHEET NO. CONT.	REV. NO.
-	C421	CD-322991	015	016	01

NG/D2-D (2012/01)
DMS VECTOR NGD200

THIS DRAWING AND THE INFORMATION CONTAINED HEREIN ARE THE SOLE PROPERTY OF [illegible] NO REPRODUCTION IN FULL OR IN PART SHALL BE OBTAINED FROM THIS DOCUMENT WITHOUT THE WRITTEN CONSENT OF ITS OWNER.

MANUFACTURER	SCHEMATICS DWG.NO	PANEL DESCRIPITION	PANEL REFERENCE
ABB PROTECTION & SUBSTATION AUTOMATION		SS 8709 13.8KV RELAY PANELS	
	CD-322952	13.8KV Capacitor Bank-1 Protection Panel	+CBP-1
	CD-322954	13.8KV Capacitor Bank-2 Protection Panel	+CBP-2
	CD-322956	13.8KV Capacitor Bank-2 Protection Panel	+CBP-3
	CD-322958	13.8 KV ACCS PANEL	+ACCS
	CD-322962	13.8KV ACSE PANEL	+ACSE
	CD-322968	13.8KV Under Voltage Load Shedding Panel	+UVLS
	CD-322964	13.8KV Under Frequency Load Shedding Panel-1	+UFLS01
	CD-322966	13.8KV Under Frequency Load Shedding Panel-2	+UFLS02

AS-BUILT BY _____ DATE _____ | CONTRACT NO. 11131113/00 | JOB ORDER NO. S-13656

REV. NO.	DATE	DESCRIPTION
01	13 49	FACTORY ASBUILT
00	13 04	FOR APPROVAL

DRAWN BY RIZ CHECKED BY KVR
DATE STARTED 24.01.2013 DATE COMPLETED _____
OPRG. DEPT. CTPD ENG. DEPT. AUT-PSAC

DRAWING REFERENCES
132KV BUSBAR PROTN.MAIN-1 CU PANEL +BBP1-1
S/S 8709 - 132/13.8KV IN AL-KHARJ CITY
RIYADH SAUDI ARABIA

الشركة الوطنية لنقل الكهرباء
نقل الكهرباء
National Grid SA

INDEX	PLANT NO.	DRAWING NUMBER	SHEET NO. SHT	SHEET NO. CONT.	REV. NO.
-	C421	CD-322991	016	211	01

NG/D2-D (2012/01)
DMS VECTOR NGD200

THIS DRAWING AND THE INFORMATION CONTAINED HEREIN ARE THE SOLE PROPERTY OF NATIONAL GRID SA NO REPRODUCTION IN FULL OR IN PART SHALL BE OBTAINED FROM THIS DOCUMENT WITHOUT THE WRITTEN CONSENT OF ITS OWNER.

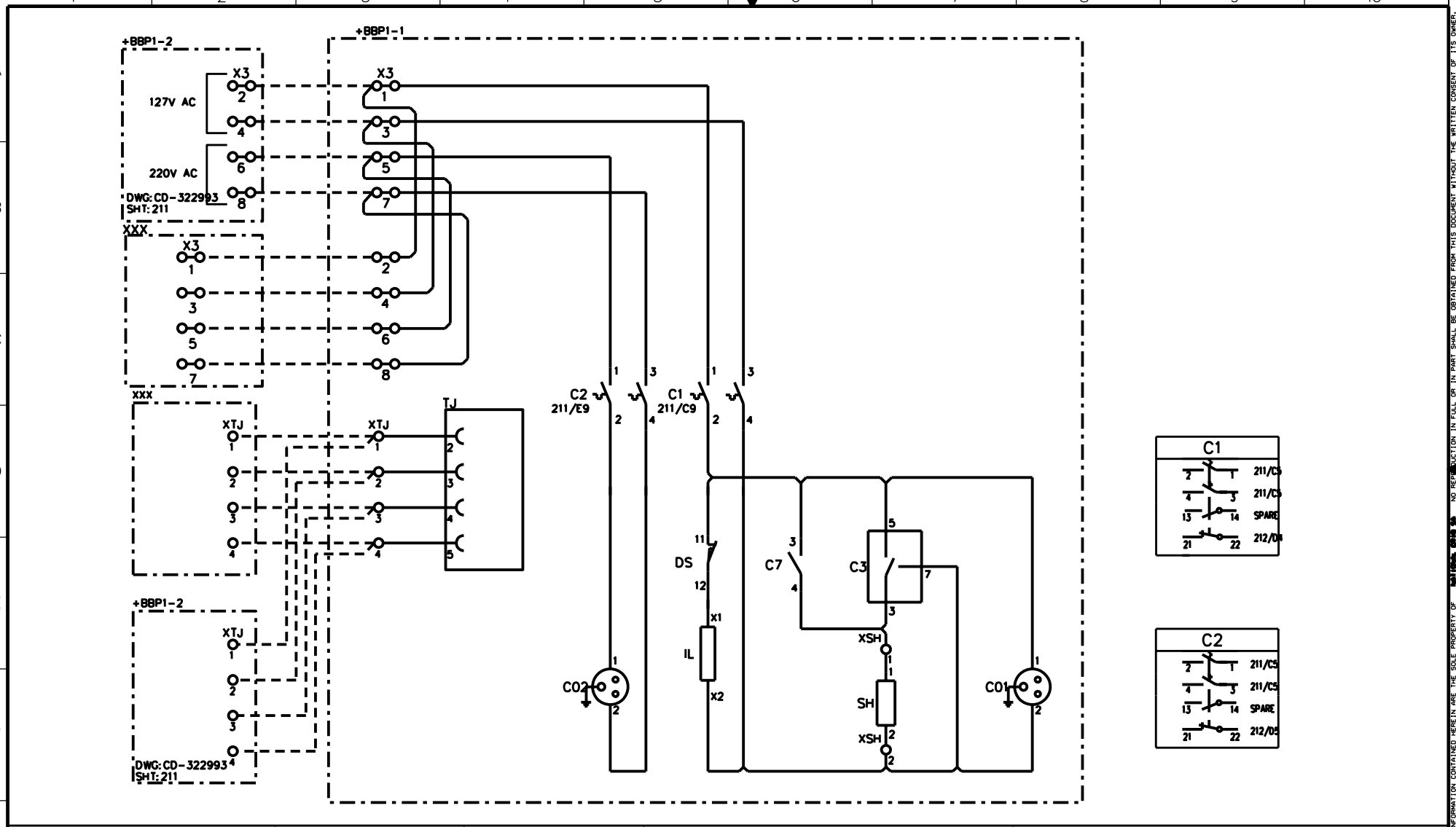

AS-BUILT BY _____ DATE _____	CONTRACT NO. 11131113/00	JOB ORDER NO. S-13656

REV. NO.	DATE	DESCRIPTION
01	13 49	FACTORY ASBUILT
00	13 04	FOR APPROVAL

DRAWN BY RIZ CHECKED BY KVR
DATE STARTED 24.01.2013 DATE COMPLETED _____
OPRG. DEPT. CTPD ENG. DEPT. AUT-PSAC

AC SUPPLY FOR ILLUMINATION & POWER SOCKET
132KV BUSBAR PROTN.MAIN-1 CU PANEL +BBP1-1
S/S 8709 - 132/13.8KV IN AL-KHARJ CITY
RIYADH SAUDI ARABIA

الشركة الوطنية لنقل الكهرباء
نقل الكهرباء
National Grid SA

INDEX	PLANT NO.	DRAWING NUMBER	SHEET NO. SHT	SHEET NO. CONT.	REV. NO.
-	C421	CD-322991	211	212	01

NG/D2-D (2012/01)
DMS VECTOR NGD200

THIS DRAWING AND THE INFORMATION CONTAINED HEREIN ARE THE SOLE PROPERTY OF [redacted] NO REPRODUCTION IN FULL OR IN PART SHALL BE OBTAINED FROM THIS DOCUMENT WITHOUT THE WRITTEN CONSENT OF ITS OWNER.

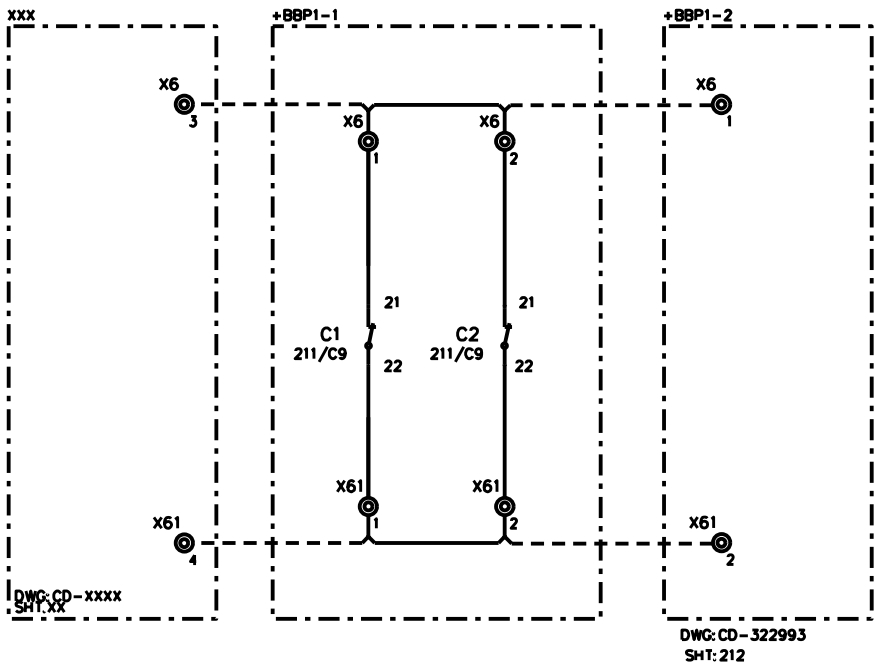

AS-BUILT BY _____ DATE _____	CONTRACT NO. 11131113/00	JOB ORDER NO. S-13656

REV. NO.	DATE	DESCRIPTION
01	13 49	FACTORY ASBUILT
00	13 04	FOR APPROVAL

DRAWN BY RIZ CHECKED BY KVR
DATE STARTED 24.01.2013 DATE COMPLETED _____
OPRG. DEPT. CTPD ENG. DEPT. AUT-PSAC

AC SUPPLY AUXILARY CONTACTS

132KV BUSBAR PROTN.MAIN-1 CU PANEL +BBP1-1

S/S 8709 - 132/13.8KV IN AL-KHARJ CITY

RIYADH SAUDI ARABIA

الشركة الوطنية لنقل الكهرباء
نقل الكهرباء
National Grid SA

INDEX	PLANT NO.	DRAWING NUMBER	SHEET NO. SHT	SHEET NO. CONT.	REV. NO.
-	C421	CD-322991	212	216	01

NG/D2-D (2012/01)
DMS VECTOR NGD200

THIS DRAWING AND THE INFORMATION CONTAINED HEREIN ARE THE SOLE PROPERTY OF [redacted] NO REPRODUCTION IN FULL OR IN PART SHALL BE OBTAINED FROM THIS DOCUMENT WITHOUT THE WRITTEN CONSENT OF ITS OWNER.

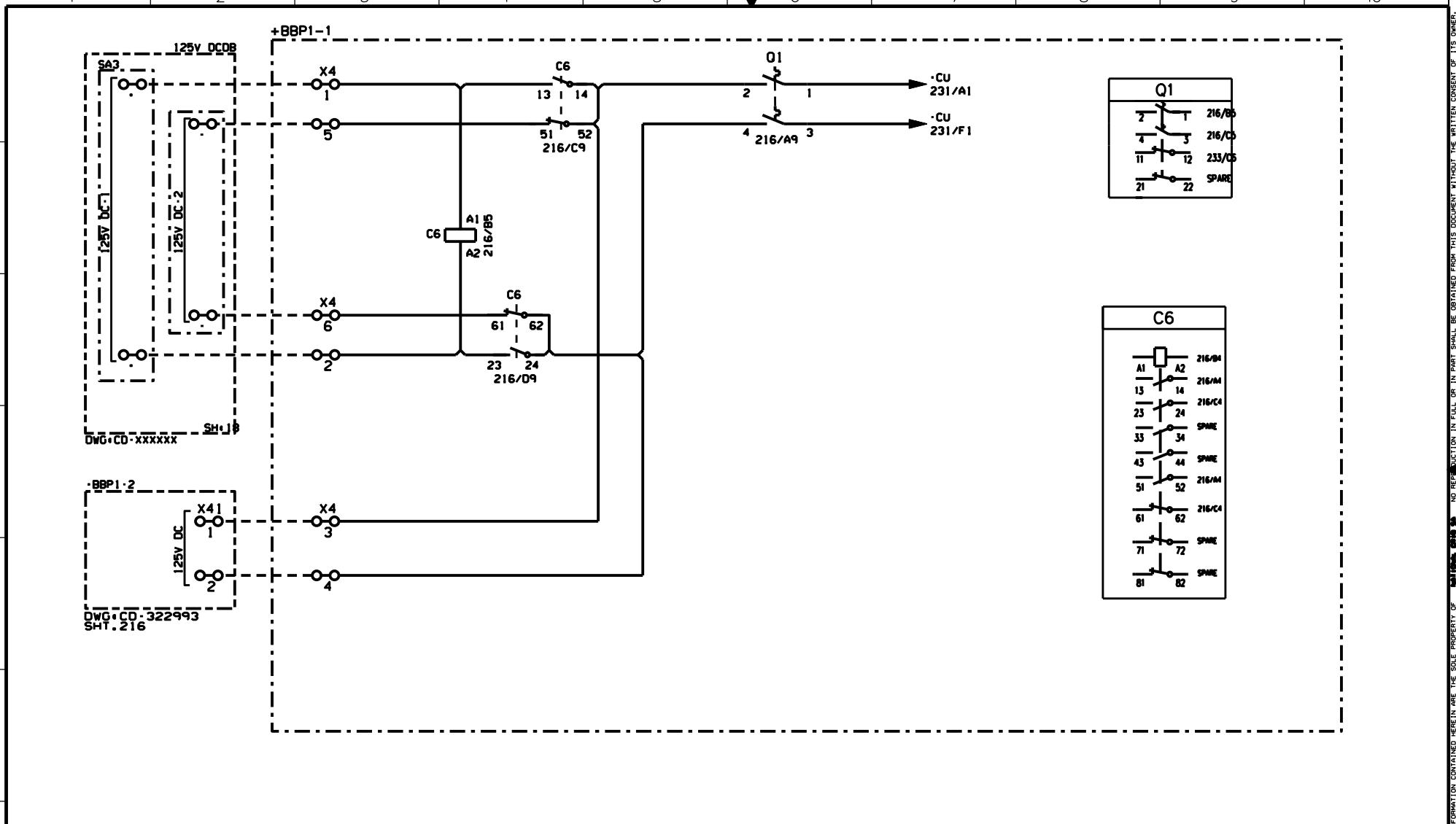

AS-BUILT BY _____ DATE _____	CONTRACT NO. 11131113/00	JOB ORDER NO. S-13656

REV. NO.	DATE	DESCRIPTION
01	13 49	FACTORY ASBUILT
00	13 04	FOR APPROVAL

DRAWN BY RIZ CHECKED BY KVR
DATE STARTED 24.01.2013 DATE COMPLETED
OPRG. DEPT. CTPD ENG. DEPT. AUT-PSAC

DC SUPPLY DISTRIBUTION-R1

132KV BUSBAR PROTN.MAIN-1 CU PANEL +BBP1-1

S/S 8709 - 132/13.8KV IN AL-KHARJ CITY

RIYADH SAUDI ARABIA

الشركة الوطنية لنقل الكهرباء
نقل الكهرباء
National Grid SA

INDEX	PLANT NO.	DRAWING NUMBER	SHEET NO. SHT	SHEET NO. CONT.	REV. NO.
-	C421	CD-322991	216	231	01

NG/D2-D (2012/01)
DMS VECTOR NGD200

THIS DRAWING AND THE INFORMATION CONTAINED HEREIN ARE THE SOLE PROPERTY OF NATIONAL GRID SA NO REPRODUCTION IN FULL OR IN PART SHALL BE OBTAINED FROM THIS DOCUMENT WITHOUT THE WRITTEN CONSENT OF ITS OWNER.

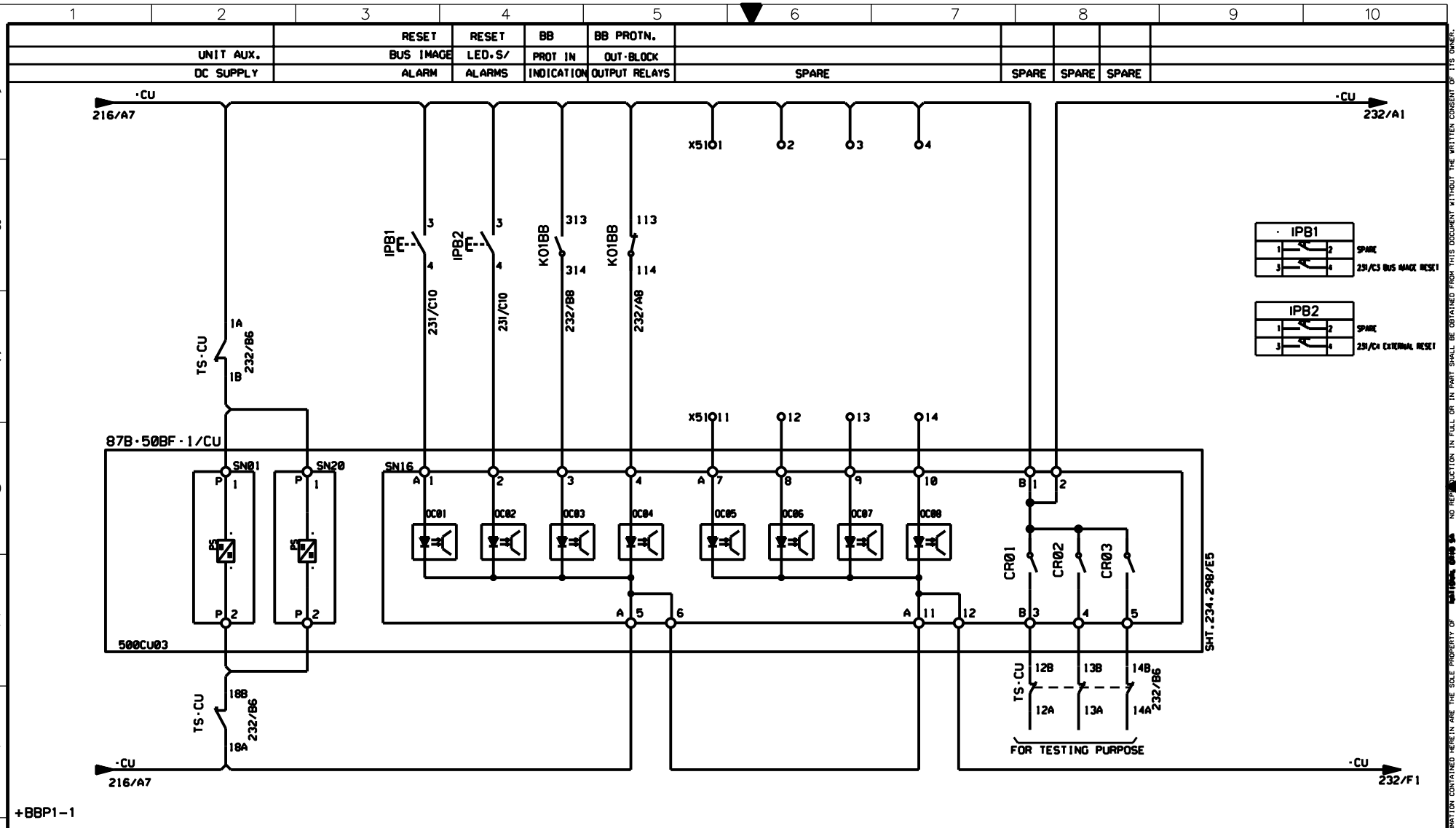

REV. NO.	DATE	DESCRIPTION
01	13 49	FACTORY ASBUILT
00	13 04	FOR APPROVAL

AS-BUILT BY _____ DATE _____

CONTRACT NO. 11131113/00 JOB ORDER NO. S-13656

DRAWN BY RIZ CHECKED BY KVR

DATE STARTED 24.01.2013 DATE COMPLETED _____

OPRG. DEPT. CTPD ENG. DEPT. AUT-PSAC

87B+50BF-1/CU PROTECTION RELAY - BINARY INPUTS

132KV BUSBAR PROTN.MAIN-1 CU PANEL +BBP1-1

S/S 8709 - 132/13.8KV IN AL-KHARJ CITY

RIYADH SAUDI ARABIA

الشركة الوطنية لنقل الكهرباء

نقل الكهرباء National Grid SA

INDEX	PLANT NO.	DRAWING NUMBER	SHEET NO. SHT	SHEET NO. CONT.	REV. NO.
-	C421	CD-322991	231	232	01

NG/D2-D (2012/01)

DMS VECTOR NGD200

THIS DRAWING AND THE INFORMATION CONTAINED HEREIN ARE THE SOLE PROPERTY OF NATIONAL GRID SA NO REPRODUCTION IN FULL OR IN PART SHALL BE OBTAINED FROM THIS DOCUMENT WITHOUT THE WRITTEN CONSENT OF ITS OWNER.

BBP IN/OUT SELECTION				
ECC		RELAY PANEL		DC SUPVN.
PROT. IN	PROT. OUT	IN	OUT	SUPPLY

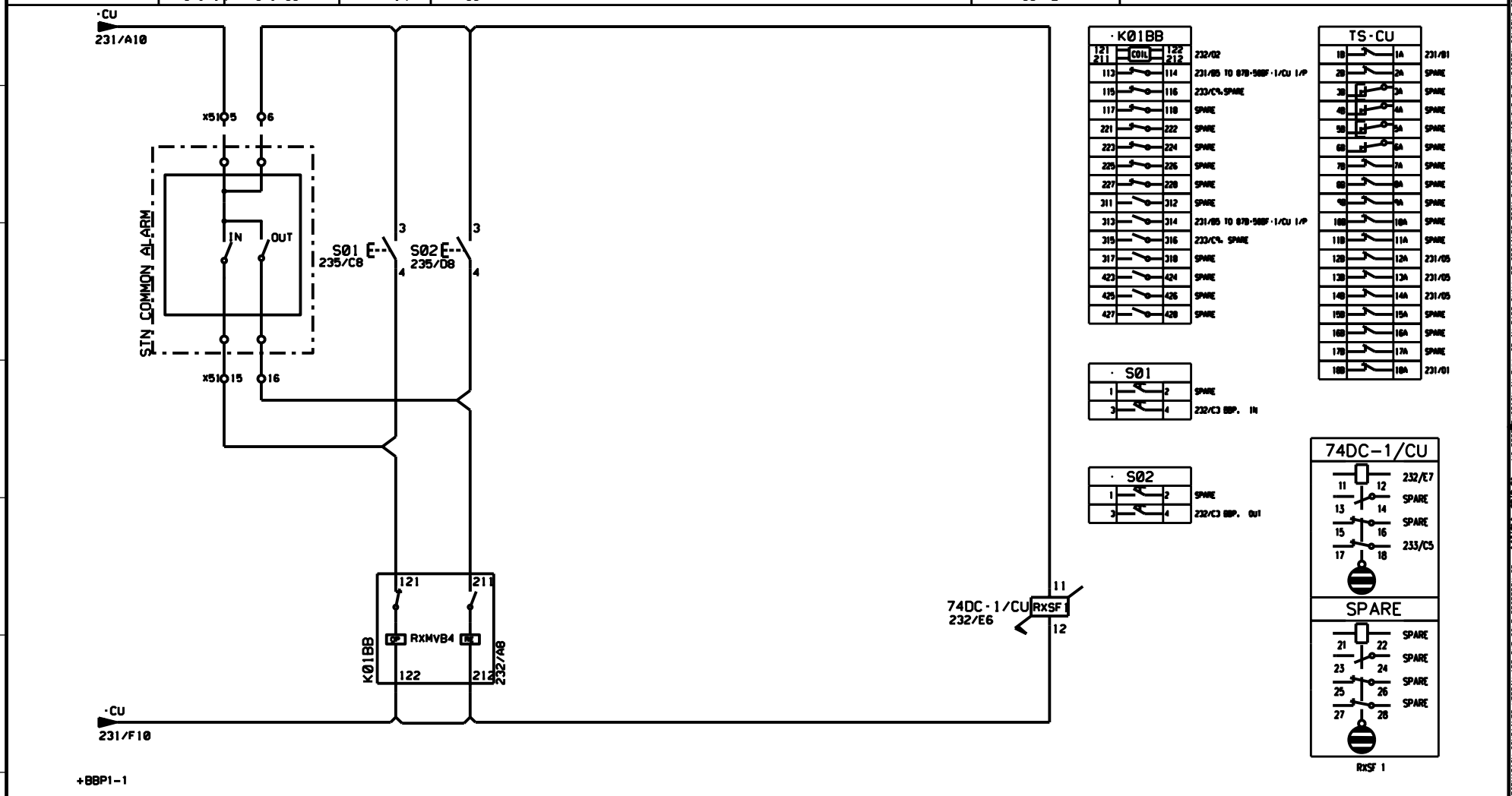

AS-BUILT BY _____ DATE _____	CONTRACT NO. 11131113/00	JOB ORDER NO. S-13656

REV. NO.	DATE	DESCRIPTION
01	13 49	FACTORY ASBUILT
00	13 04	FOR APPROVAL

DRAWN BY RIZ CHECKED BY KVR
DATE STARTED 24.01.2013 DATE COMPLETED _____
OPRG. DEPT. CTPD ENG. DEPT. AUT-PSAC

BBP IN/OUT SELECTION CIRCUIT

132KV BUSBAR PROTN.MAIN-1 CU PANEL +BBP1-1

S/S 8709 - 132/13.8KV IN AL-KHARJ CITY

RIYADH SAUDI ARABIA

الشركة الوطنية لنقل الكهرباء
نقل الكهرباء
National Grid SA

INDEX	PLANT NO.	DRAWING NUMBER	SHEET NO. SHT	SHEET NO. CONT.	REV. NO.
-	C421	CD-322991	232	233	01

NG/D2-D (2012/01)
DMS VECTOR NGD200

THIS DRAWING AND THE INFORMATION CONTAINED HEREIN ARE THE SOLE PROPERTY OF [redacted] NO REPRODUCTION IN FULL OR IN PART SHALL BE OBTAINED FROM THIS DOCUMENT WITHOUT THE WRITTEN CONSENT OF ITS OWNER.

	87B·50BF·1/CU	87B·50BF·1/CU	SPARE	SPARE
	DC FAIL	FAULTY	PROT. IN	PROT. OUT

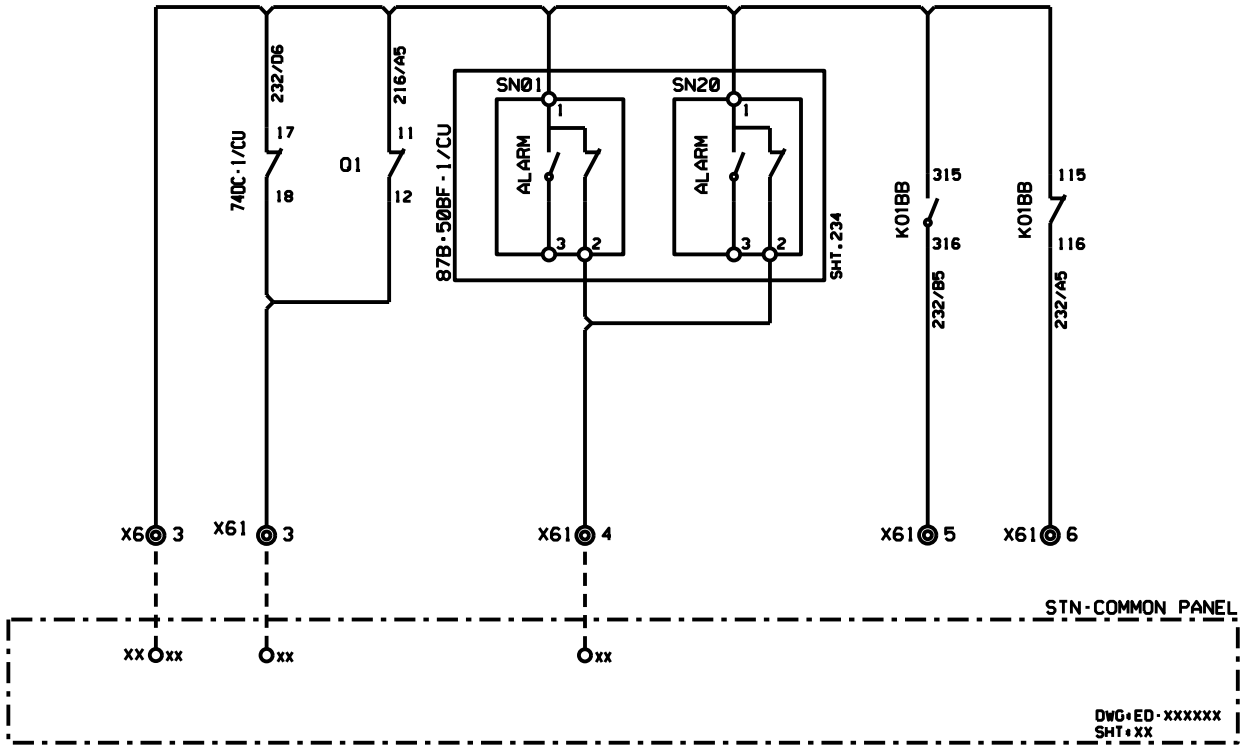

+BBP1-1

AS-BUILT BY ____ DATE ____	CONTRACT NO. 11131113/00	JOB ORDER NO. S-13656
REV. NO. / DATE / DESCRIPTION	DRAWN BY RIZ CHECKED BY KVR	STATION COMMON ALARM CIRCUITS
01 13 49 FACTORY ASBUILT	DATE STARTED 24.01.2013 DATE COMPLETED ____	132KV BUSBAR PROTN.MAIN-1 CU PANEL +BBP1-1
00 13 04 FOR APPROVAL	OPRG. DEPT. CTPD ENG. DEPT. AUT-PSAC	S/S 8709 - 132/13.8KV IN AL-KHARJ CITY
		RIYADH SAUDI ARABIA

الشركة الوطنية لنقل الكهرباء
نقل الكهرباء
National Grid SA

INDEX	PLANT NO.	DRAWING NUMBER	SHEET NO. SHT	SHEET NO. CONT.	REV. NO.
-	C421	CD-322991	233	234	01

NG/D2-D (2012/01)
DMS VECTOR NGD200

THIS DRAWING AND THE INFORMATION CONTAINED HEREIN ARE THE SOLE PROPERTY OF NATIONAL GRID SA NO REPRODUCTION IN FULL OR IN PART SHALL BE OBTAINED FROM THIS DOCUMENT WITHOUT THE WRITTEN CONSENT OF ITS OWNER.

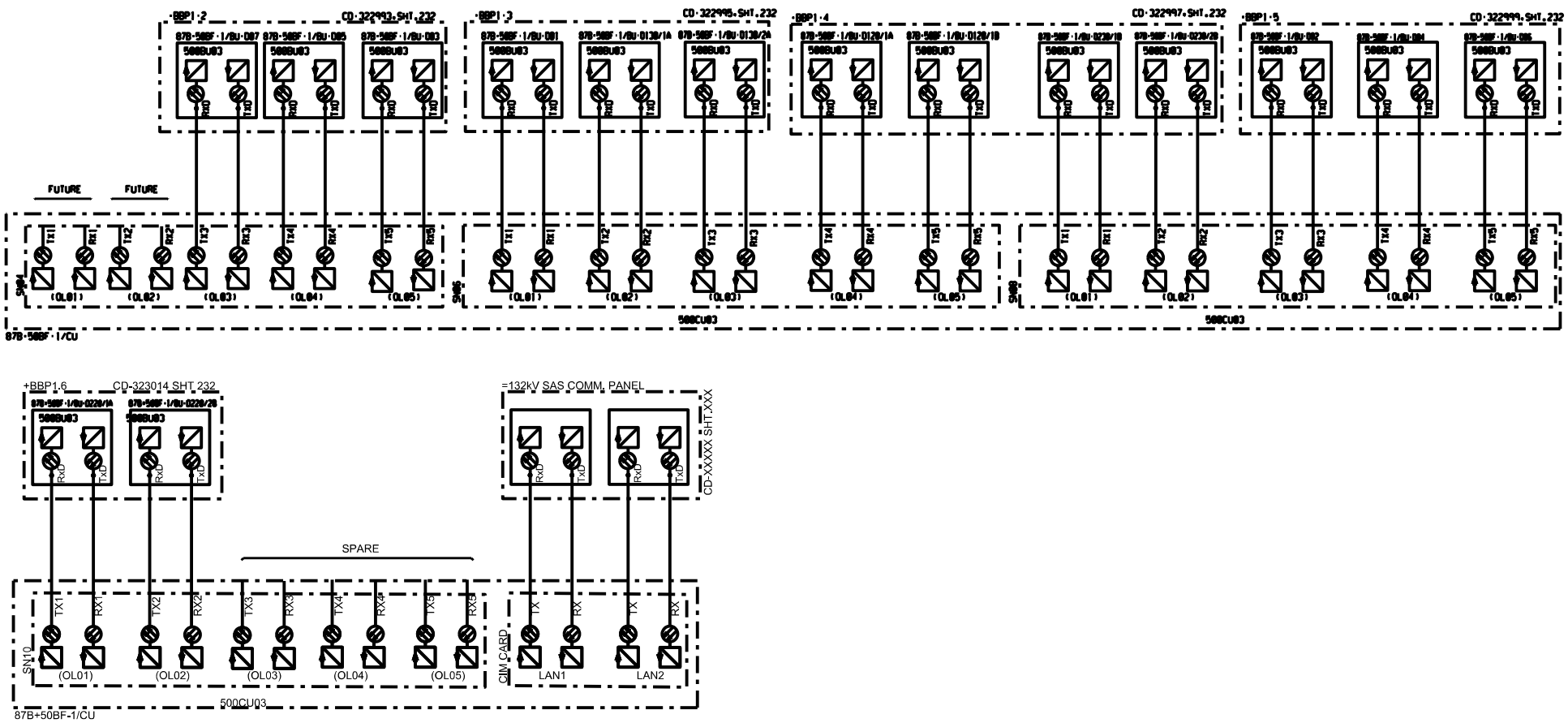

AS-BUILT BY _____ DATE _____	CONTRACT NO. 11131113/00	JOB ORDER NO. S-13656	87B+50BF-1/CU COMMUNICATION TO BAY UNITS	الشركة الوطنية لنقل الكهرباء	نقل الكهرباء National Grid SA
01 / 13 49 / FACTORY ASBUILT	DRAWN BY RIZ	CHECKED BY KVR	132KV BUSBAR PROTN.MAIN-1 CU PANEL +BBP1-1	INDEX / PLANT NO. / DRAWING NUMBER	SHEET NO. SHT / CONT. / REV. NO.
00 / 13 04 / FOR APPROVAL	DATE STARTED 24.01.2013	DATE COMPLETED _____	S/S 8709 - 132/13.8KV IN AL-KHARJ CITY	- / C421 / CD-322991	234 / 298 / 01
REV. NO. / DATE / DESCRIPTION	OPRG. DEPT. CTPD	ENG. DEPT. AUT-PSAC	RIYADH SAUDI ARABIA		

NG/D2-D (2012/01)

DMS VECTOR NGD200

THIS DRAWING AND THE INFORMATION CONTAINED HEREIN ARE THE SOLE PROPERTY OF National Grid SA NO REPRODUCTION IN FULL OR IN PART SHALL BE OBTAINED FROM THIS DOCUMENT WITHOUT THE WRITTEN CONSENT OF ITS OWNER.

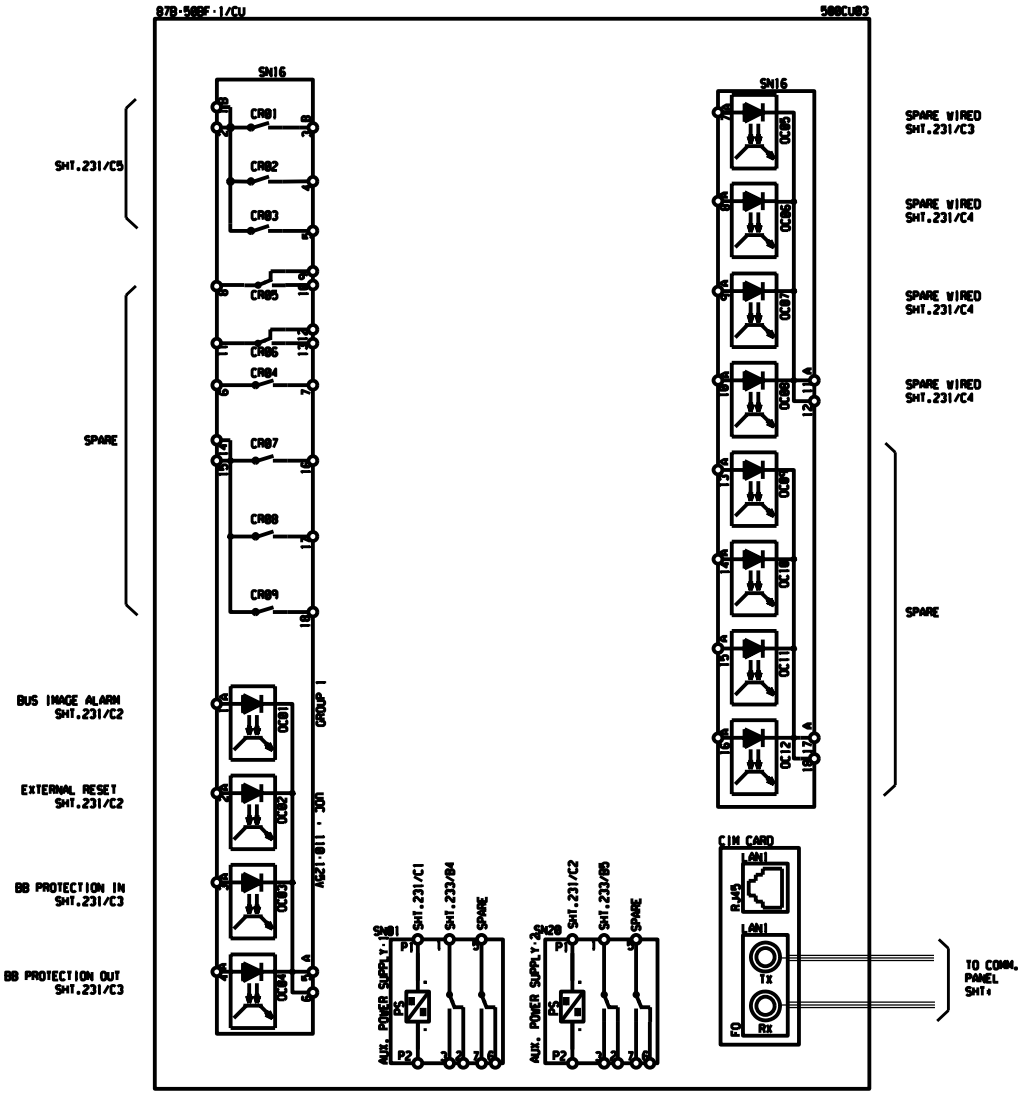

AS-BUILT BY _____ DATE _____	CONTRACT NO. 11131113/00	JOB ORDER NO. S-13656

REV. NO.	DATE	DESCRIPTION
01	13 49	FACTORY ASBUILT
00	13 04	FOR APPROVAL

DRAWN BY RIZ CHECKED BY KVR
DATE STARTED 24.01.2013 DATE COMPLETED _____
OPRG. DEPT. CTPD ENG. DEPT. AUT-PSAC

87B+50BF-1/CU INTERNAL DIAGRAM
132KV BUSBAR PROTN.MAIN-1 CU PANEL +BBP1-1
S/S 8709 - 132/13.8KV IN AL-KHARJ CITY
RIYADH SAUDI ARABIA

الشركة الوطنية لنقل الكهرباء
نقل الكهرباء National Grid SA

INDEX	PLANT NO.	DRAWING NUMBER	SHEET NO. SHT	SHEET NO. CONT.	REV. NO.
-	C421	CD-322991	298	299	01

NG/D2-D (2012/01)
DMS VECTOR NGD200

THIS DRAWING AND THE INFORMATION CONTAINED HEREIN ARE THE SOLE PROPERTY OF NATIONAL GRID SA NO REPRODUCTION IN FULL OR IN PART SHALL BE OBTAINED FROM THIS DOCUMENT WITHOUT THE WRITTEN CONSENT OF ITS OWNER.

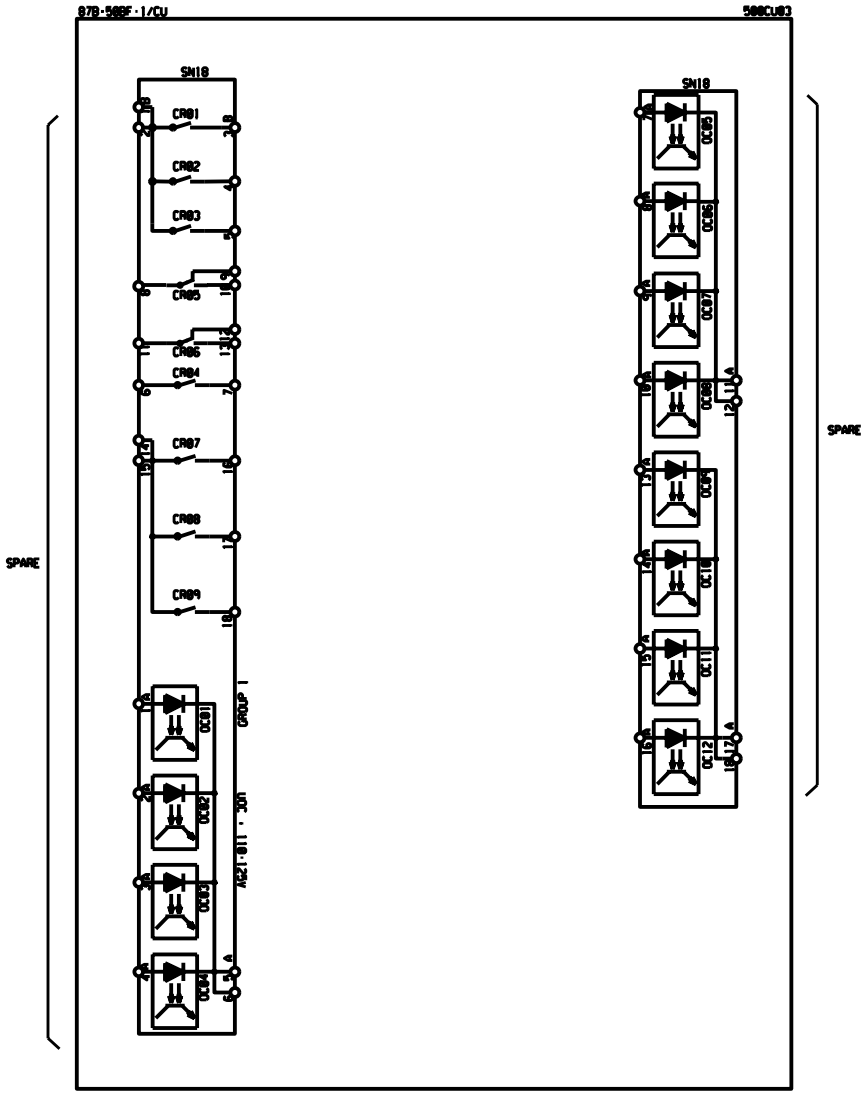

AS-BUILT BY _____ DATE _____	CONTRACT NO. 11131113/00	JOB ORDER NO. S-13656

REV. NO.	DATE	DESCRIPTION
01	13 49	FACTORY ASBUILT
00	13 04	FOR APPROVAL

DRAWN BY RIZ CHECKED BY KVR
DATE STARTED 24.01.2013 DATE COMPLETED _____
OPRG. DEPT. CTPD ENG. DEPT. AUT-PSAC

87B+50BF-1/CU INTERNAL DIAGRAM
132KV BUSBAR PROTN.MAIN-1 CU PANEL +BBP1-1
S/S 8709 - 132/13.8KV IN AL-KHARJ CITY
RIYADH SAUDI ARABIA

الشركة الوطنية لنقل الكهرباء
نقل الكهرباء
National Grid SA

INDEX	PLANT NO.	DRAWING NUMBER	SHEET NO. SHT	SHEET NO. CONT.	REV. NO.
-	C421	CD-322991	299	301	01

NG/D2-D (2012/01)
DMS VECTOR NGD200

THIS DRAWING AND THE INFORMATION CONTAINED HEREIN ARE THE SOLE PROPERTY OF [redacted] NO REPRODUCTION IN FULL OR IN PART SHALL BE OBTAINED FROM THIS DOCUMENT WITHOUT THE WRITTEN CONSENT OF ITS OWNER.

INTERNAL REFERENCE	X3 AC CKT.
211/A2	1
211/A5	2
211/A2	3
211/A5	4
211/A2	5
211/A5	6
211/A2	7
211/A5	8
SPARE	9
SPARE	10

INTERNAL REFERENCE	X4 DC CKTS
216/A3	1
216/C3	2
216/D3	3
216/E3	4
216/A3	5
216/C3	6
SPARE	7
SPARE	8
SPARE	9
SPARE	10

INTERNAL REFERENCE	X5 CONTROL & PROTN.
231/A5	1
231/A6	2
231/A6	3
231/A7	4
232/B2	5
232/B2	6
SPARE	7
SPARE	8
SPARE	9
SPARE	10
231/C5	11
231/C6	12
231/C6	13
231/C7	14
232/D2	15
232/D2	16
SPARE	17
SPARE	18
SPARE	19
SPARE	20

INTERNAL REFERENCE	X61 ALARM CKTS
212/E5	1
212/E6	2
233/E5	3
233/E5	4
233/E7	5
233/E9	6
233/E9	7
SPARE	8
SPARE	9
SPARE	10

INTERNAL REFERENCE	XTJ T.JACK
211/B2	1
211/B2	2
211/B2	3
211/B2	4
SPARE	5

INTERNAL REFERENCE	XSH SPACEHEATER
211/E7	1
211/F7	2
SPARE	3
SPARE	4
SPARE	5

INTERNAL REFERENCE	X6 ALARM CKTS
212/B5	1
212/B5	2
SPARE	3
SPARE	4
SPARE	5

AS-BUILT BY _____ DATE _____ | CONTRACT NO. 11131113/00 | JOB ORDER NO. S-13656

REV. NO.	DATE	DESCRIPTION
01	13 49	FACTORY ASBUILT
00	13 04	FOR APPROVAL

DRAWN BY RIZ CHECKED BY KVR
DATE STARTED 24.01.2013 DATE COMPLETED _____
OPRG. DEPT. CTPD ENG. DEPT. AUT-PSAC

TERMINAL BLOCK ALLOCATION

132KV BUSBAR PROTN.MAIN-1 CU PANEL +BBP1-1

S/S 8709 - 132/13.8KV IN AL-KHARJ CITY

RIYADH SAUDI ARABIA

الشركة الوطنية لنقل الكهرباء
نقل الكهرباء
National Grid SA

INDEX	PLANT NO.	DRAWING NUMBER	SHEET NO. SHT	SHEET NO. CONT.	REV. NO.
-	C421	CD-322991	301	NIL	01

NG/D2-D (2012/01)
DMS VECTOR NGD200

THIS DRAWING AND THE INFORMATION CONTAINED HEREIN ARE THE SOLE PROPERTY OF [redacted] NO REPRODUCTION IN FULL OR IN PART SHALL BE OBTAINED FROM THIS DOCUMENT WITHOUT THE WRITTEN CONSENT OF ITS OWNER.